YN-yn-d Xfmr in Zero Sequence

use three (3) single phase ideal Xfmrs
reference pri and sec windings to neutral
connect tertiary windings as delta
model pri, sec, ter impedances in series with windings
add a zero sequence source to primary windings
short the secondary windings to neutral
all quantities are per-unit
when using per-unit system for analysis:

$$V_p = V_s = V_t = V_{source} - I_p^0 Z_p^0 = 1 - I_p^0 Z_p^0$$

$$\text{because } P_{in} = P_{out}$$
$$I_p^0 = I_s^0 + I_t^0$$

we are wanting the phase impedance
"seen" by the source voltage: Z_{in}^0

on the primary side:

$$Z_{in}^0 = \frac{V_{source}}{I_p^0} = \frac{1}{I_p^0}$$
$$I_p^0 = \frac{1}{Z_{in}^0}$$

on the secondary side:

$$I_s^0 = \frac{V_s}{Z_s^0} = \frac{1 - I_p^0 Z_p^0}{Z_s^0}$$

on the tertiary side:

$$I_t^0 = \frac{V_t}{Z_t^0} = \frac{1 - I_p^0 Z_p^0}{Z_t^0}$$

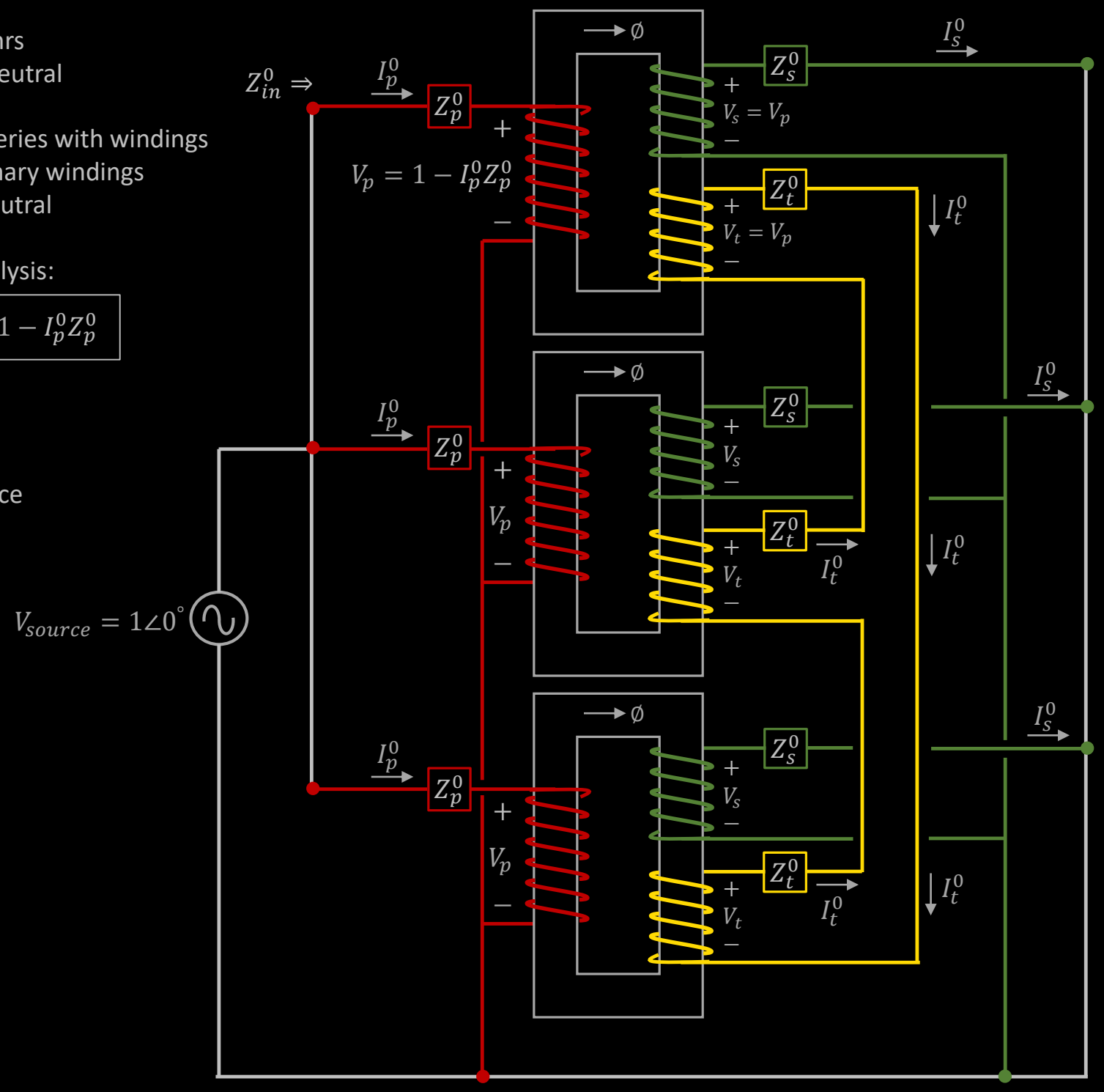

YN-yn-d Xfmr in Zero Sequence

because $P_{in} = P_{out}$

$$I_p^0 = I_s^0 + I_t^0$$

$$I_p^0 = \frac{1 - I_p^0 Z_p^0}{Z_s^0} + \frac{1 - I_p^0 Z_p^0}{Z_t^0}$$

$$I_p^0 = \frac{1}{Z_s^0} - \frac{I_p^0 Z_p^0}{Z_s^0} + \frac{1}{Z_t^0} - \frac{I_p^0 Z_p^0}{Z_t^0}$$

$$I_p^0 + \frac{I_p^0 Z_p^0}{Z_s^0} + \frac{I_p^0 Z_p^0}{Z_t^0} = \frac{1}{Z_s^0} + \frac{1}{Z_t^0}$$

$$I_p^0 \left[1 + \frac{Z_p^0}{Z_s^0} + \frac{Z_p^0}{Z_t^0}\right] = \frac{1}{Z_s^0} + \frac{1}{Z_t^0}$$

$$I_p^0 = \frac{\left[\frac{1}{Z_s^0} + \frac{1}{Z_t^0}\right]}{\left[1 + \frac{Z_p^0}{Z_s^0} + \frac{Z_p^0}{Z_t^0}\right]}$$

$$I_p^0 = \frac{\left[\frac{1}{Z_s^0} + \frac{1}{Z_t^0}\right] Z_s^0 Z_t^0}{\left[1 + \frac{Z_p^0}{Z_s^0} + \frac{Z_p^0}{Z_t^0}\right] Z_s^0 Z_t^0}$$

$$I_p^0 = \frac{Z_t^0 + Z_s^0}{Z_s^0 Z_t^0 + Z_p^0 Z_t^0 + Z_p^0 Z_s^0}$$

$$Z_{in}^0 = \frac{1}{I_p^0} = \frac{Z_s^0 Z_t^0 + Z_p^0 Z_t^0 + Z_p^0 Z_s^0}{Z_t^0 + Z_s^0}$$

$$Z_{in}^0 = \frac{Z_s^0 Z_t^0}{Z_s^0 + Z_t^0} + \frac{Z_p^0 [Z_s^0 + Z_t^0]}{Z_s^0 + Z_t^0}$$

$$Z_{in}^0 = Z_p^0 + \frac{Z_s^0 Z_t^0}{Z_s^0 + Z_t^0}$$

$$Z_{in}^0 = Z_p^0 + Z_s^0 \parallel Z_t^0$$

$$\boxed{Z_{in}^0 = Z_p^0 + Z_s^0 \parallel Z_t^0}$$

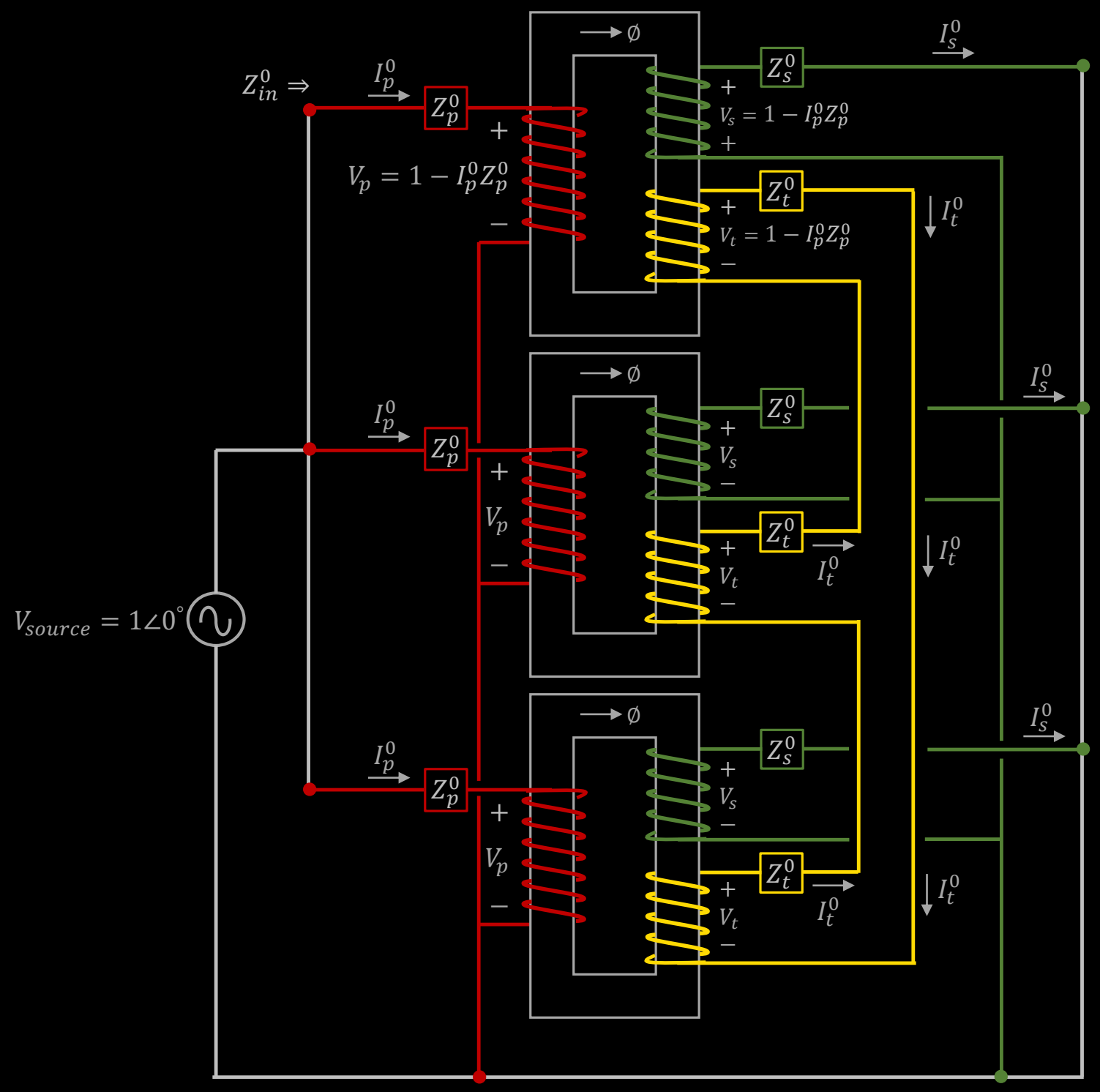

YN-yn-d Xfmr in Zero Sequence

$$Z_{in}^0 = Z_p^0 + Z_s^0 \parallel Z_t^0 \quad \Rightarrow$$

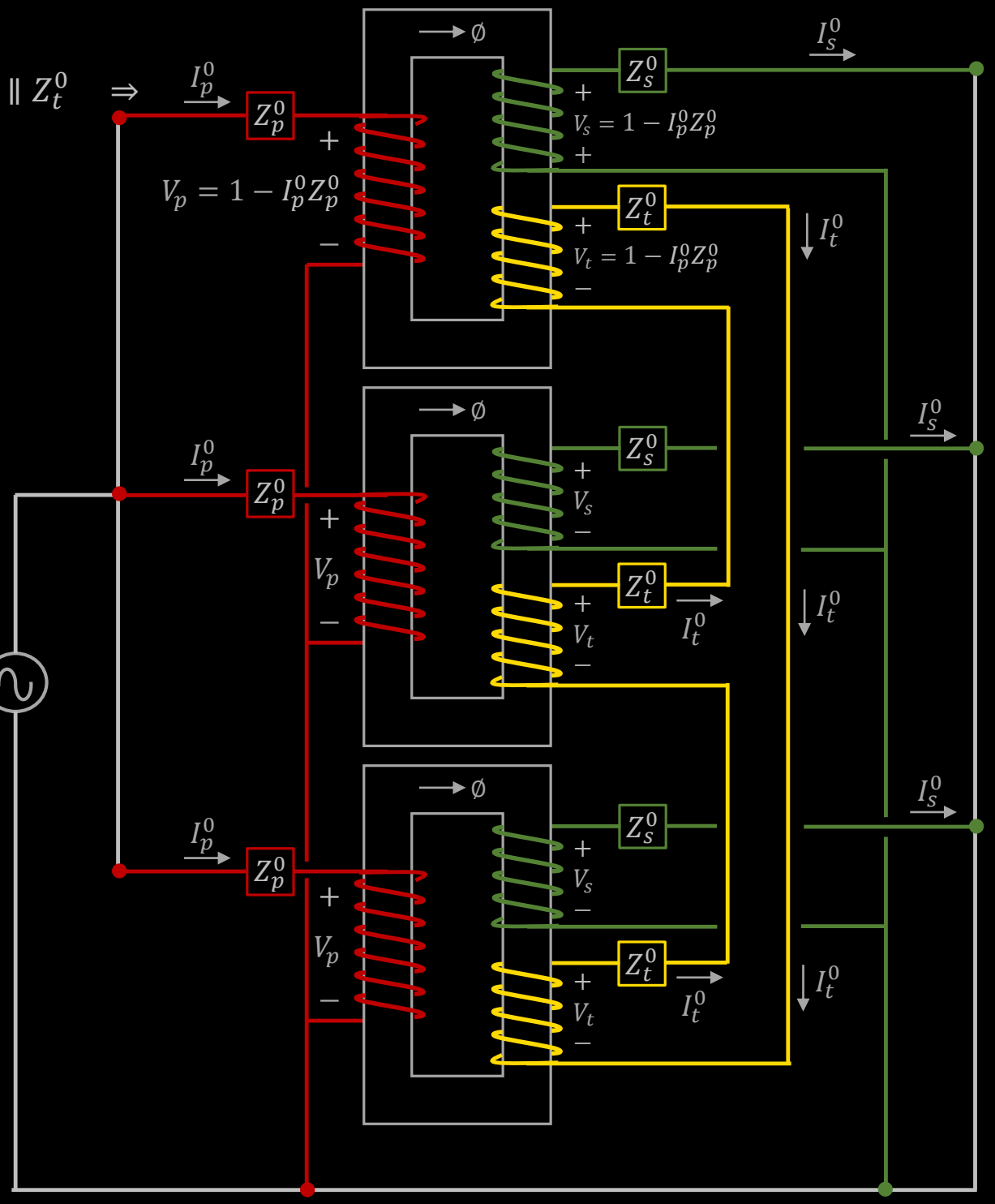

the results of this derivation reveal that
the zero sequence impedance of the delta tertiary
is effectively connected to the neutral !!
this is not intuitive when looking at the
electrical circuit.
(notice the circulating current in the delta tertiary)

So when performing a per-phase analysis
in zero sequence, the YYΔ transformer
T-model looks like this:

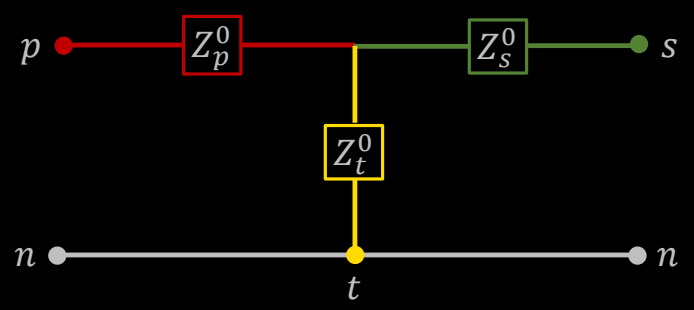

ЗΦΕΕ

Dedicated to Power Engineering

Questions or Comments …

contact us