YN-yn Xfmr in Zero Sequence

use 3 single phase ideal Xfmrs
reference pri and sec windings to neutral
model pri and sec impedances in series with windings*
add a zero sequence source to primary windings
short the secondary windings to neutral
all quantities are per-unit
when using per-unit system for analysis:

$$V_p = V_s = V_{source} - I_p^0 Z_p^0 = 1 - I_p^0 Z_p^0$$

$$\text{because } P_{in} = P_{out}$$
$$I_p^0 = I_s^0$$

we are wanting the phase impedance
"seen" by the source voltage: Z_{in}^0

on the primary side:

$$Z_{in}^0 = \frac{V_s}{I_p^0} = \frac{1}{I_p^0}$$
$$I_p^0 = \frac{1}{Z_{in}^0}$$

on the secondary side:

$$I_s^0 = \frac{V_s}{Z_s^0} = \frac{1 - I_p^0 Z_p^0}{Z_s^0}$$

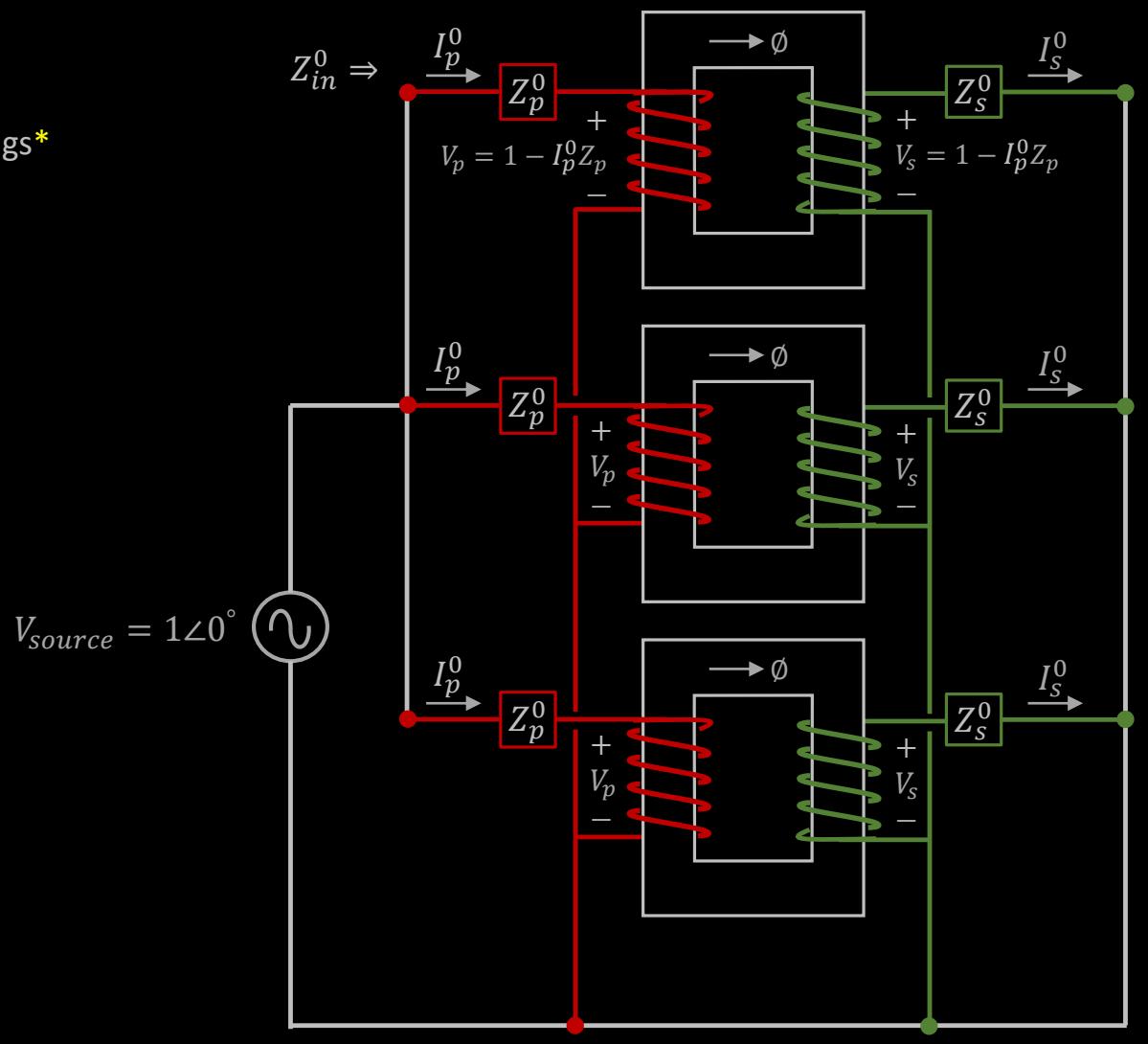

* it should be noted that Z_p and Z_s are not reported separately in a manufacturer test report.
instead Z_{ps} is reported and is equal to $Z_p + Z_s$

YN-yn Xfmr in Zero Sequence

$$because\ P_{in} = P_{out}$$

$$I_p^0 = I_s^0$$

$$I_p^0 = \frac{1 - I_p^0 Z_p^0}{Z_s^0}$$

$$I_p^0 = \frac{1}{Z_s^0} - \frac{I_p^0 Z_p^0}{Z_s^0}$$

$$I_p^0 + \frac{I_p^0 Z_p^0}{Z_s^0} = \frac{1}{Z_s^0}$$

$$I_p^0 \left[1 + \frac{Z_p^0}{Z_s^0}\right] = \frac{1}{Z_s^0}$$

$$I_p^0 = \frac{\frac{1}{Z_s^0}}{1 + \frac{Z_p^0}{Z_s^0}}$$

$$I_p^0 = \frac{1}{Z_s^0 + Z_p^0}$$

$$Z_{in}^0 = \frac{1}{I_p^0} = Z_s^0 + Z_p^0$$

$$Z_{in}^0 = Z_s^0 + Z_p^0$$

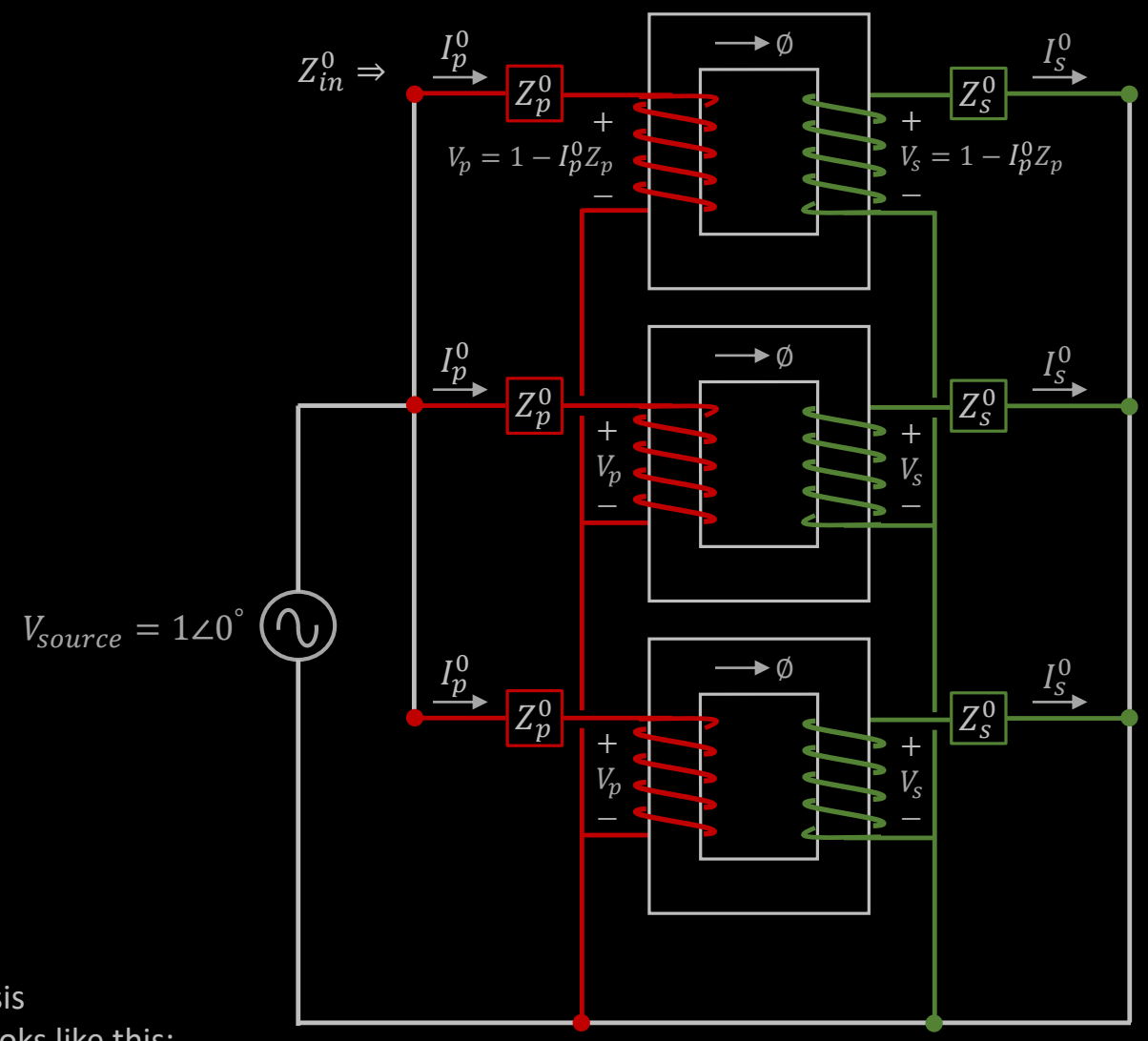

$$Z_{in}^0 = Z_p^0 + Z_s^0 = Z_{ps}^0$$

nothing remarkable here...
you simply add up the primary and secondary pu impedances

So when performing a per-phase analysis
in zero sequence, the YY transformer looks like this:

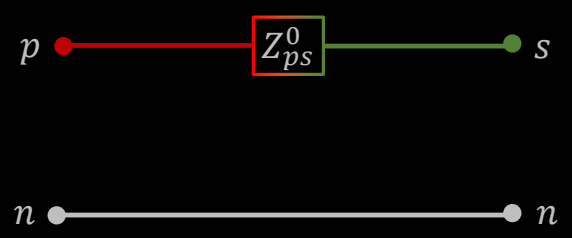

ЗΦΕΕ

Dedicated to Power Engineering

Questions or Comments …

contact us