Phase Shifting Transformers
PST

$\vec{V}_A = V_\phi \angle \theta_A$
$\vec{V}_B = \vec{V}_A \angle -120°$
$\vec{V}_C = \vec{V}_A \angle 120°$
$V_{Base} = V_\phi$

$V_{LL} = \sqrt{3} V_\phi$
$\vec{V}_{AB} = \sqrt{3}\vec{V}_A \angle 30°$
$\vec{V}_{BC} = \sqrt{3}\vec{V}_A \angle -90°$
$\vec{V}_{CA} = \sqrt{3}\vec{V}_A \angle 150°$

consider the 1: 1 ideal Xfmr below

(impedance reflected to the secondary)

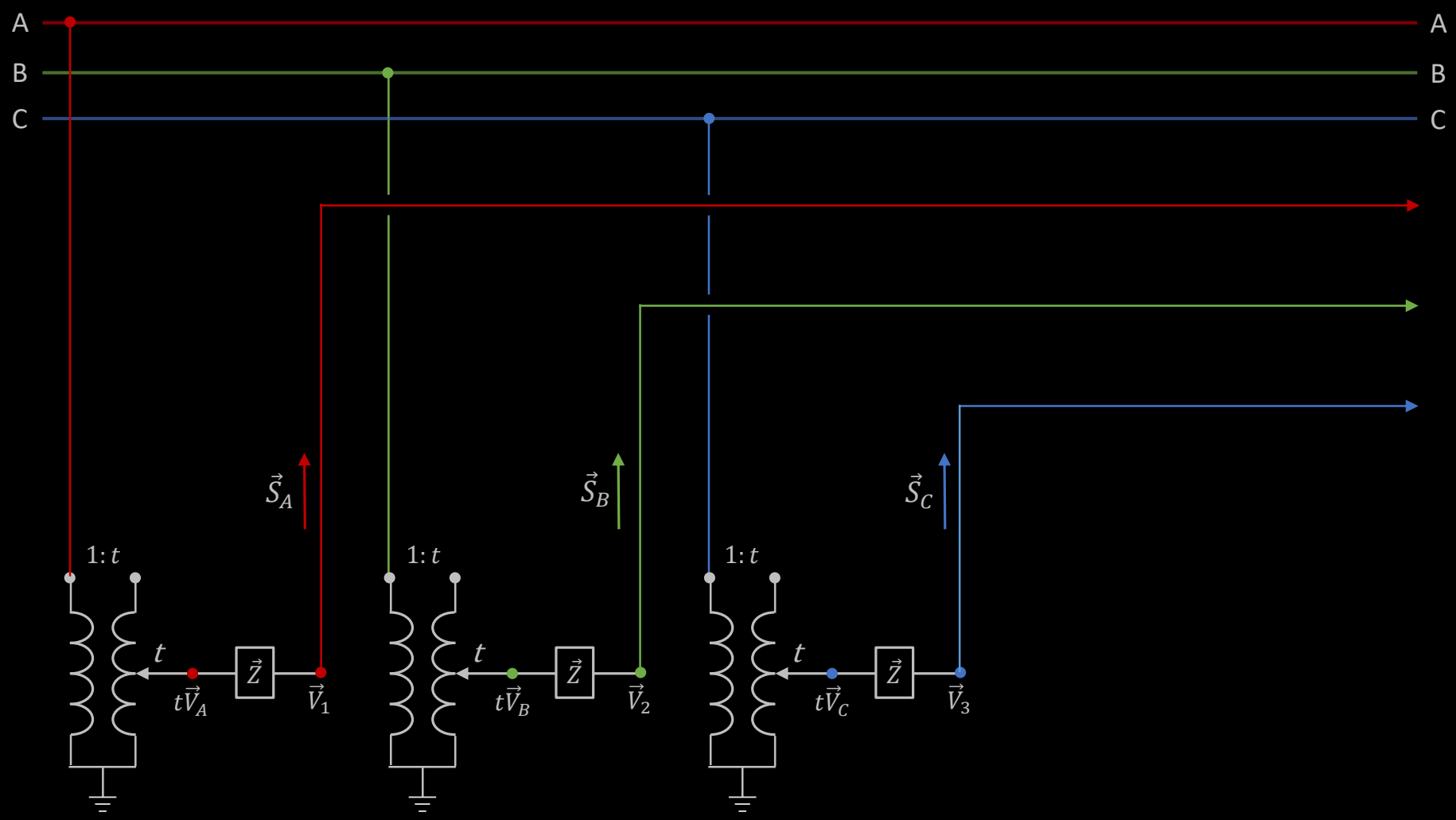

$$t = \frac{tap^{kV}_{setting}}{V^{kV}_{nominal}} \quad \textit{(per-unit)}$$

Phase Shifting Transformers (cont.)

now consider phase A

$\vec{V}_A = V_\phi \angle \theta_A$
$\vec{V}_B = \vec{V}_A \angle -120°$
$\vec{V}_C = \vec{V}_A \angle 120°$
$V_{Base} = V_\phi$

$V_{LL} = \sqrt{3} V_\phi$
$\vec{V}_{AB} = \sqrt{3}\vec{V}_A \angle 30°$
$\vec{V}_{BC} = \sqrt{3}\vec{V}_A \angle -90°$
$\vec{V}_{CA} = \sqrt{3}\vec{V}_A \angle 150°$

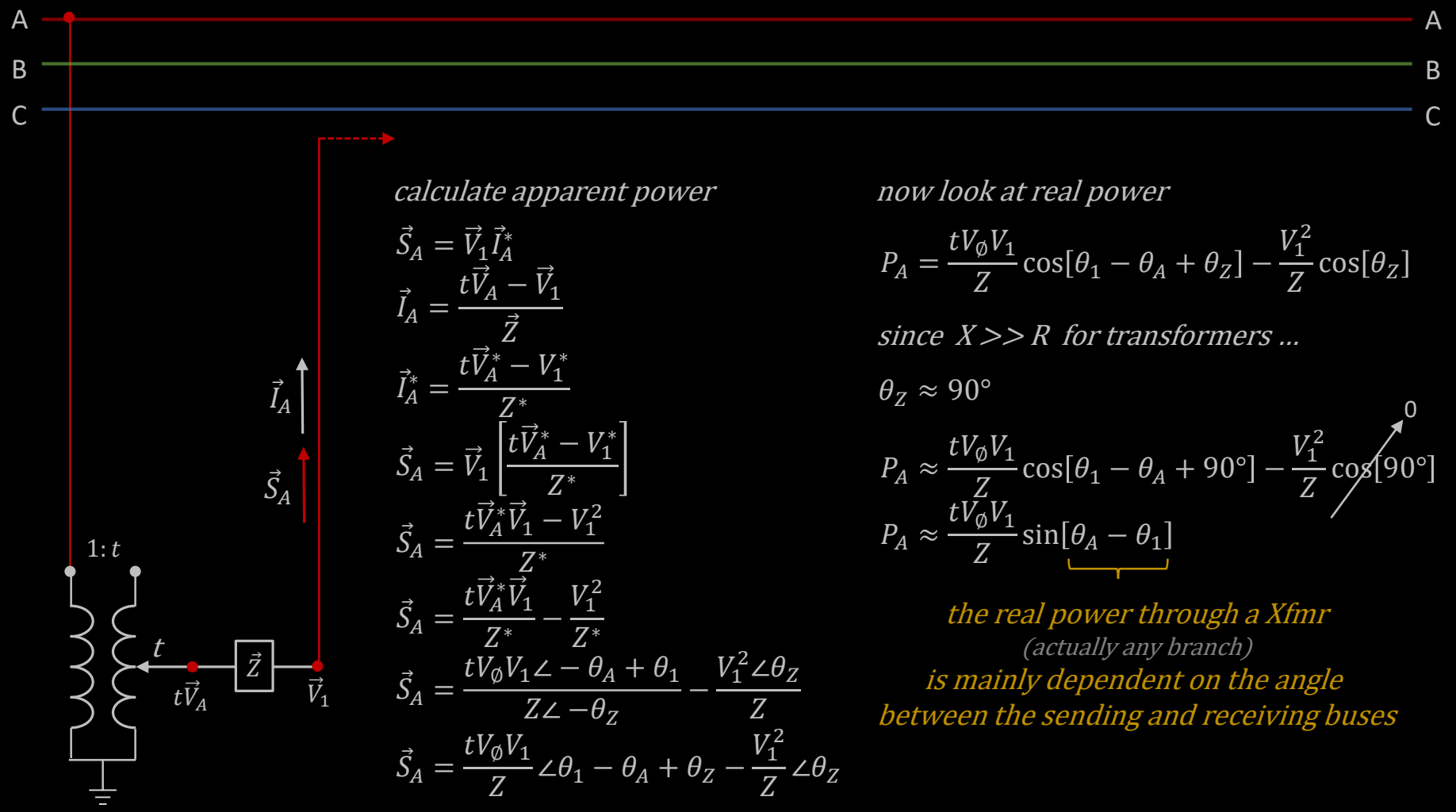

calculate apparent power

$$\vec{S}_A = \vec{V}_1 \vec{I}_A^*$$

$$\vec{I}_A = \frac{t\vec{V}_A - \vec{V}_1}{\vec{Z}}$$

$$\vec{I}_A^* = \frac{t\vec{V}_A^* - V_1^*}{Z^*}$$

$$\vec{S}_A = \vec{V}_1 \left[\frac{t\vec{V}_A^* - V_1^*}{Z^*}\right]$$

$$\vec{S}_A = \frac{t\vec{V}_A^*\vec{V}_1 - V_1^2}{Z^*}$$

$$\vec{S}_A = \frac{t\vec{V}_A^*\vec{V}_1}{Z^*} - \frac{V_1^2}{Z^*}$$

$$\vec{S}_A = \frac{tV_\emptyset V_1 \angle -\theta_A + \theta_1}{Z\angle -\theta_Z} - \frac{V_1^2 \angle \theta_Z}{Z}$$

$$\vec{S}_A = \frac{tV_\emptyset V_1}{Z}\angle \theta_1 - \theta_A + \theta_Z - \frac{V_1^2}{Z}\angle \theta_Z$$

now look at real power

$$P_A = \frac{tV_\emptyset V_1}{Z}\cos[\theta_1 - \theta_A + \theta_Z] - \frac{V_1^2}{Z}\cos[\theta_Z]$$

since $X >> R$ for transformers ...

$$\theta_Z \approx 90°$$

$$P_A \approx \frac{tV_\emptyset V_1}{Z}\cos[\theta_1 - \theta_A + 90°] - \frac{V_1^2}{Z}\cancel{\cos[90°]}^{\,0}$$

$$P_A \approx \frac{tV_\emptyset V_1}{Z}\sin[\underbrace{\theta_A - \theta_1}]$$

the real power through a Xfmr
(actually any branch)
is mainly dependent on the angle
between the sending and receiving buses

a PST exploits this angle dependency by using a second xfmr in series
between the sending and receiving buses and injecting a voltage that is out of phase

Leading PST

shunt windings has $1{:}\frac{1}{\sqrt{3}}$ *turns ratio (consider impedances later)*

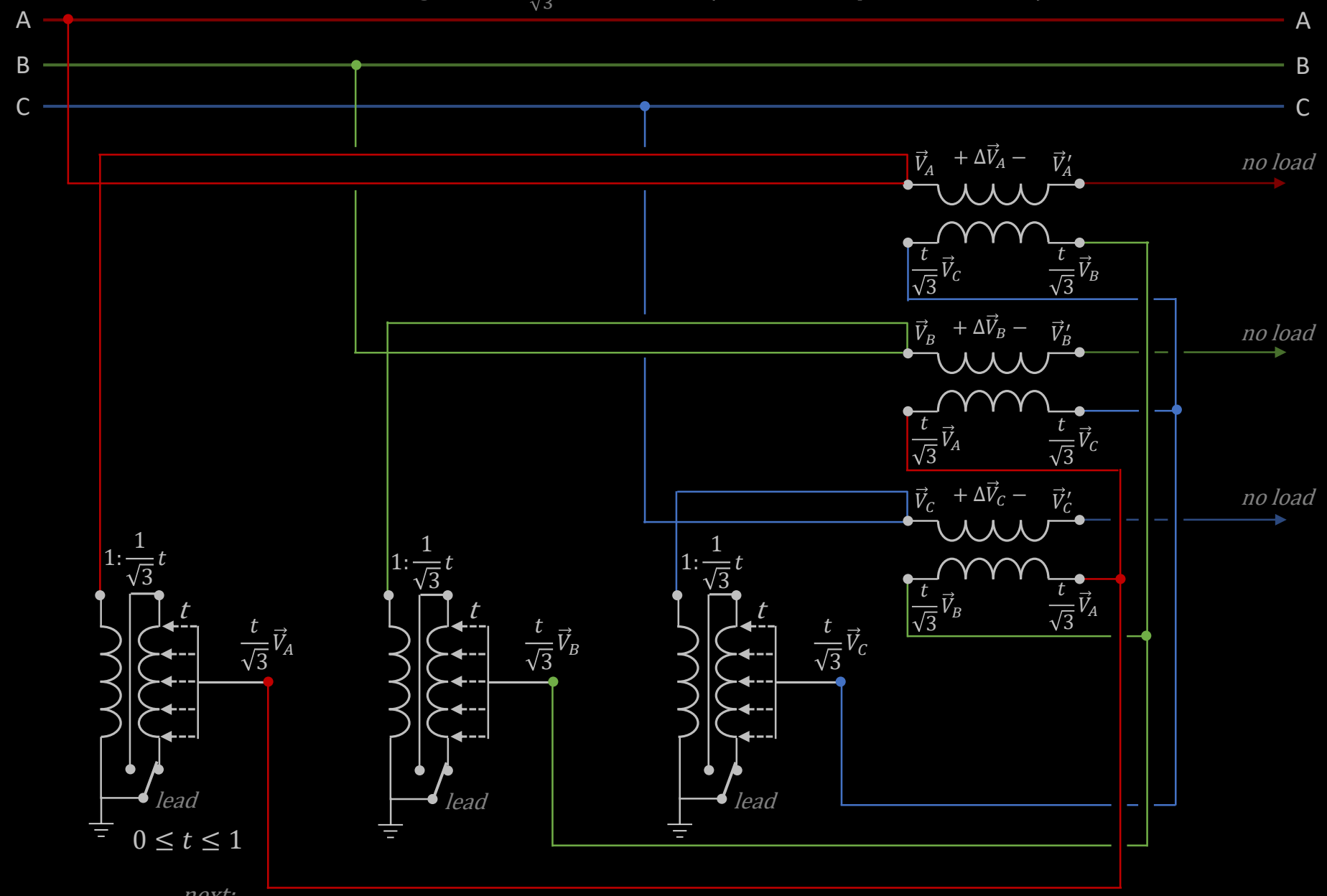

next:

the shunt windings inject the series windings with a voltage that is 90° out of phase

Leading PST (cont.)

$\vec{V}_A = V_\phi\angle 0$
$\vec{V}_B = \vec{V}_A\angle -120°$
$\vec{V}_C = \vec{V}_A\angle 120°$

$\vec{V}_{AB} = \sqrt{3}\vec{V}_A\angle 30°$
$\vec{V}_{BC} = \sqrt{3}\vec{V}_A\angle -90°$
$\vec{V}_{CA} = \sqrt{3}\vec{V}_A\angle 150°$

consider phase A
and
calculate the injected voltage

$$\Delta\vec{V}_A = \frac{t}{\sqrt{3}}\vec{V}_C - \frac{t}{\sqrt{3}}\vec{V}_B$$
$$\Delta\vec{V}_A = \frac{t}{\sqrt{3}}\left[\vec{V}_C - \vec{V}_B\right]$$
$$\Delta\vec{V}_A = \frac{t}{\sqrt{3}}\vec{V}_{CB}$$
$$\Delta\vec{V}_A = -\frac{t}{\sqrt{3}}\vec{V}_{BC}$$
$$\Delta\vec{V}_A = -\frac{t}{\sqrt{3}}\sqrt{3}\vec{V}_A\angle -90°$$
$$\Delta\vec{V}_A = t\vec{V}_A\angle 90°$$

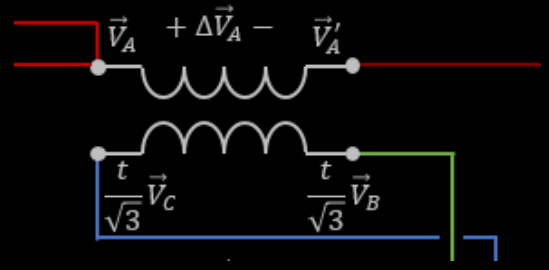

$$\boxed{\frac{\Delta\vec{V}_A}{\vec{V}_A} = t\angle 90°}$$

the injected voltage or voltage change…
- adds 90° to each phase's angle
- multiplies each phases amplitude by t

Leading PST (cont.)

aka: Boosting PST

$\vec{V}_A = V_\phi\angle 0$
$\vec{V}_B = \vec{V}_A\angle -120°$
$\vec{V}_C = \vec{V}_A\angle 120°$

$\vec{V}_{AB} = \sqrt{3}\vec{V}_A\angle 30°$
$\vec{V}_{BC} = \sqrt{3}\vec{V}_A\angle -90°$
$\vec{V}_{CA} = \sqrt{3}\vec{V}_A\angle 150°$

consider phase A

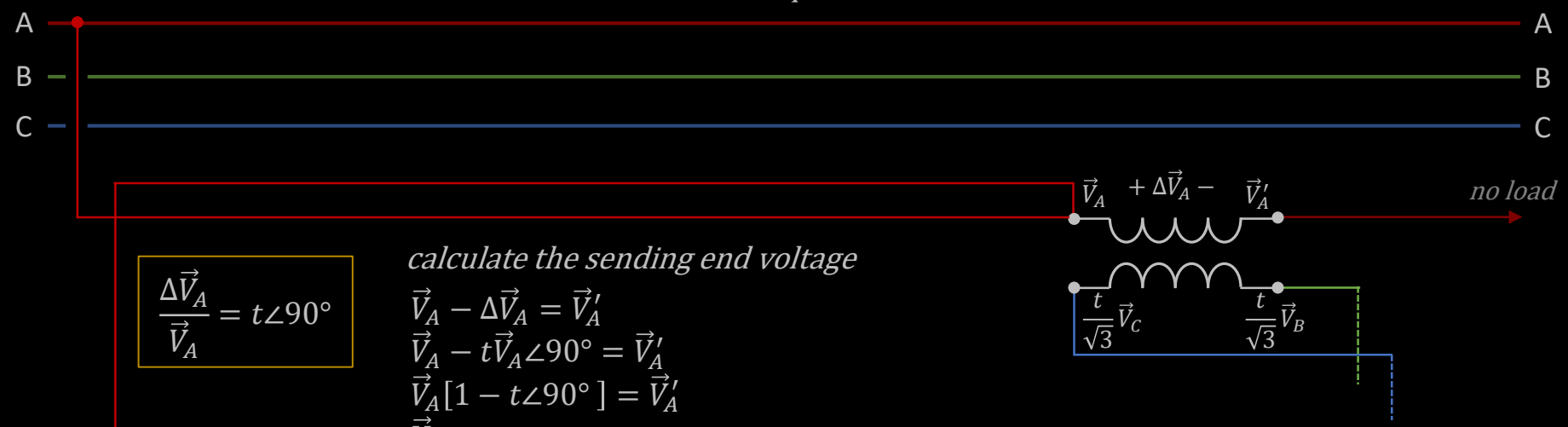

$$\boxed{\frac{\Delta\vec{V}_A}{\vec{V}_A} = t\angle 90°}$$

calculate the sending end voltage

$$\vec{V}_A - \Delta\vec{V}_A = \vec{V}_A'$$
$$\vec{V}_A - t\vec{V}_A\angle 90° = \vec{V}_A'$$
$$\vec{V}_A[1 - t\angle 90°] = \vec{V}_A'$$
$$\frac{\vec{V}_A}{\vec{V}_A'} = [1 - t\angle 90°]^{-1}$$
$$\frac{\vec{V}_A}{\vec{V}_A'} = \left[\sqrt{1+t^2}\angle -\tan^{-1}[t]\right]^{-1}$$
$$\frac{\vec{V}_A}{\vec{V}_A'} = \frac{1}{\sqrt{1+t^2}}\angle\alpha$$
$$\alpha = \tan^{-1}[t]$$
$$\frac{|\vec{V}_A'|}{|\vec{V}_A|} = \sqrt{1+t^2}$$
$$\frac{|\vec{V}_A'|}{|\vec{V}_A|} = \sqrt{1+[\tan\alpha]^2}$$

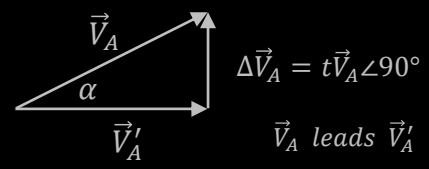

α = the resulting phase angle shift . (no load)
the magnitude of the receiving end voltage
will be higher than the sending end voltage.

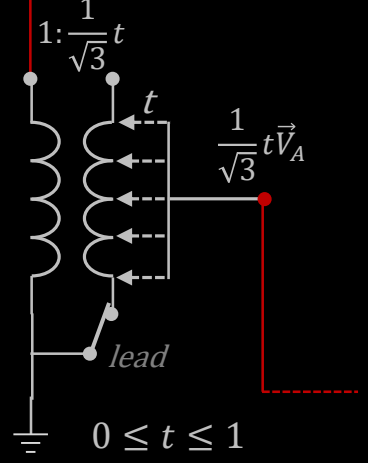

$0 \le t \le 1$

this configuration is known as an "asymmetrical" PST.
meaning that… "relative" to the sending end voltage…
the receiving end voltage and angle are both changed.
leading angle for sending end since α is positive.
the power out of the receiving end will be increased, or …
the power into the receiving end will be decreased.

Lagging PST

toggle the Lead – Lag switch (reverses polarity of shunt secondary winding)

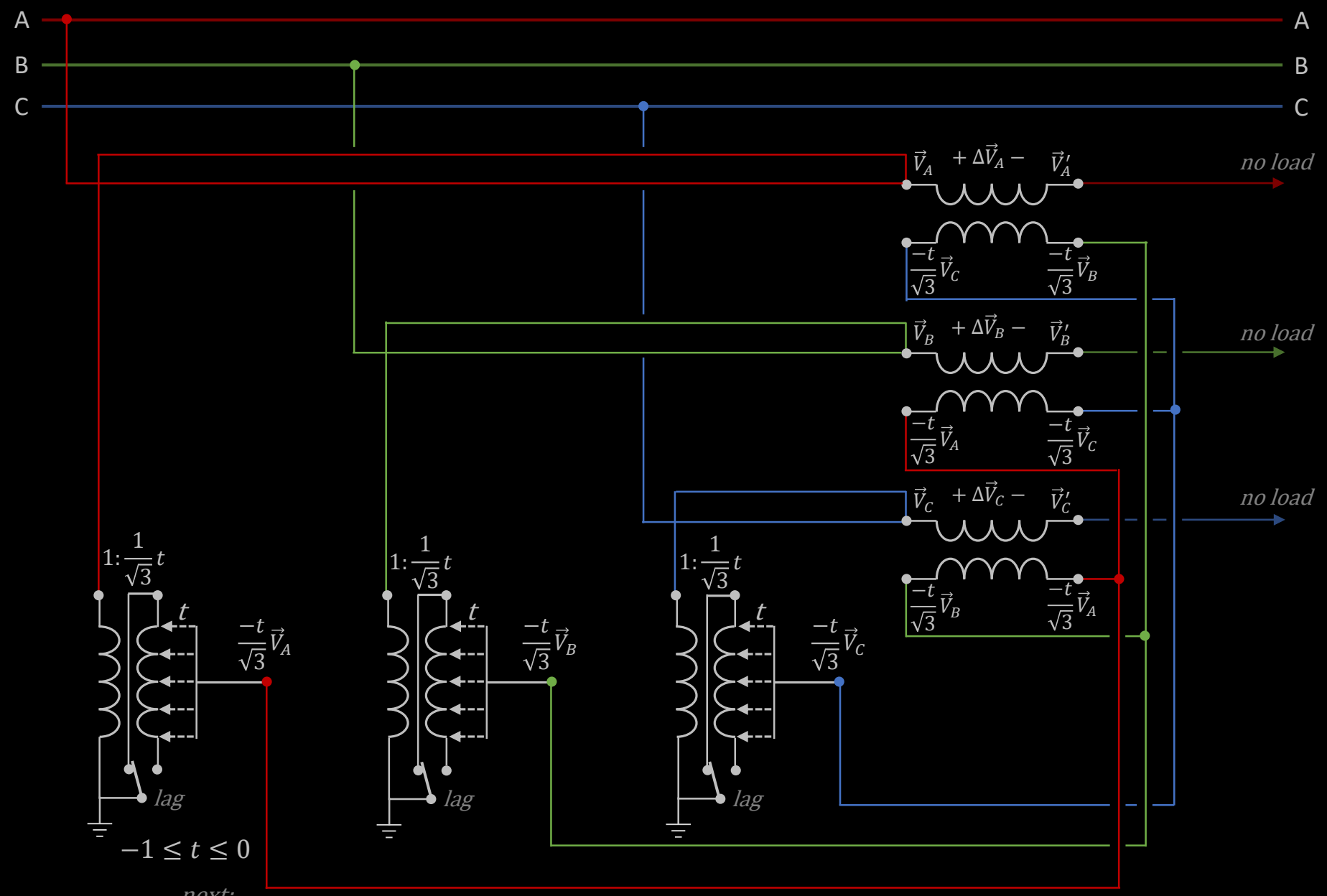

next:

the shunt windings inject the series windings with a voltage that is 90° out of phase

lagging PST (cont.)

$\vec{V}_A = V_\phi\angle 0$
$\vec{V}_B = \vec{V}_A\angle -120°$
$\vec{V}_C = \vec{V}_A\angle 120°$

$\vec{V}_{AB} = \sqrt{3}\vec{V}_A\angle 30°$
$\vec{V}_{BC} = \sqrt{3}\vec{V}_A\angle -90°$
$\vec{V}_{CA} = \sqrt{3}\vec{V}_A\angle 150°$

consider phase A
and
calculate the injected voltage

$$\Delta\vec{V}_A = \frac{-t}{\sqrt{3}}\vec{V}_C - \frac{-t}{\sqrt{3}}\vec{V}_B$$
$$\Delta\vec{V}_A = -\frac{t}{\sqrt{3}}[\vec{V}_C - \vec{V}_B]$$
$$\Delta\vec{V}_A = -\frac{t}{\sqrt{3}}\vec{V}_{CB}$$
$$\Delta\vec{V}_A = \frac{t}{\sqrt{3}}\vec{V}_{BC}$$
$$\Delta\vec{V}_A = \frac{t}{\sqrt{3}}\sqrt{3}\vec{V}_A\angle -90°$$
$$\Delta\vec{V}_A = t\vec{V}_A\angle -90°$$

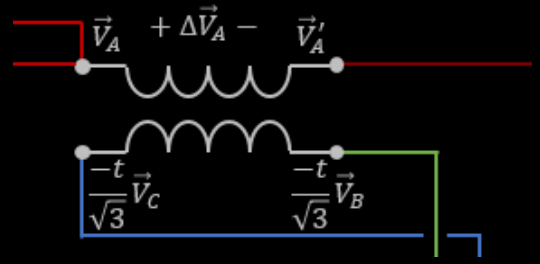

$$\boxed{\frac{\Delta\vec{V}_A}{\vec{V}_A} = t\angle -90°}$$

the injected voltage or voltage change…
- adds -90° to each phase's angle
- multiplies each phases amplitude by t

Lagging PST (cont.)

aka: Bucking PST

$\vec{V}_A = V_\phi\angle 0$
$\vec{V}_B = \vec{V}_A\angle -120°$
$\vec{V}_C = \vec{V}_A\angle 120°$

$\vec{V}_{AB} = \sqrt{3}\vec{V}_A\angle 30°$
$\vec{V}_{BC} = \sqrt{3}\vec{V}_A\angle -90°$
$\vec{V}_{CA} = \sqrt{3}\vec{V}_A\angle 150°$

consider phase A

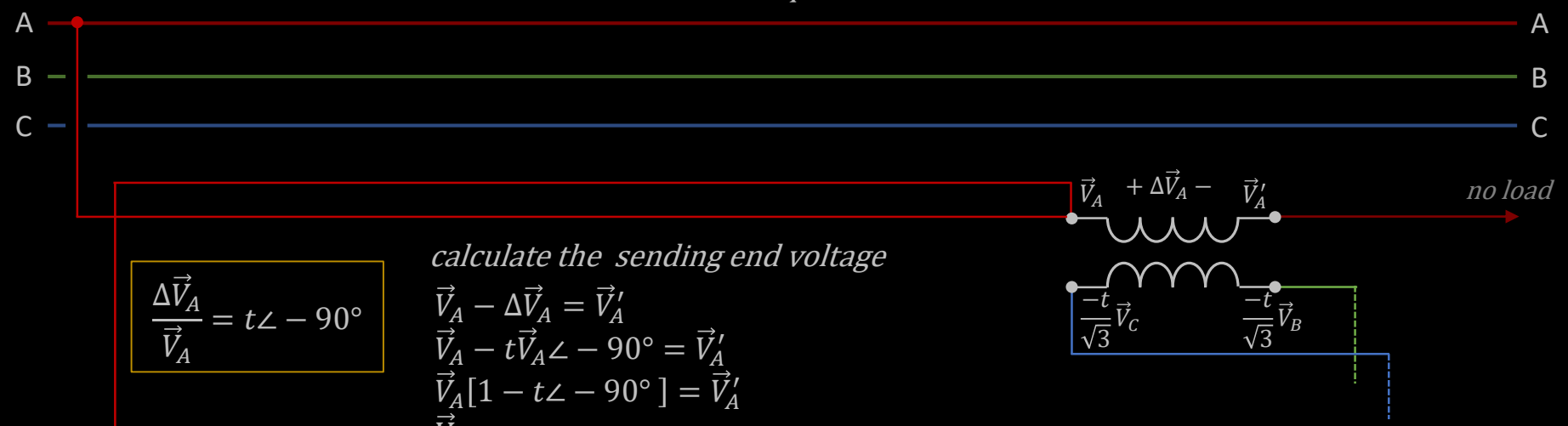

$$\boxed{\frac{\Delta\vec{V}_A}{\vec{V}_A} = t\angle -90°}$$

calculate the sending end voltage

$$\vec{V}_A - \Delta\vec{V}_A = \vec{V}_A'$$
$$\vec{V}_A - t\vec{V}_A\angle -90° = \vec{V}_A'$$
$$\vec{V}_A[1 - t\angle -90°\,] = \vec{V}_A'$$
$$\frac{\vec{V}_A}{\vec{V}_A'} = [1 + t\angle 90°]^{-1}$$
$$\frac{\vec{V}_A}{\vec{V}_A'} = \left[\sqrt{1+t^2}\angle \tan^{-1}[t]\right]^{-1}$$
$$\frac{\vec{V}_A}{\vec{V}_A'} = \frac{1}{\sqrt{1+t^2}}\angle -\alpha$$
$$\alpha = \tan^{-1}[t]$$
$$\frac{|\vec{V}_A'|}{|\vec{V}_A|} = \sqrt{1+t^2}$$
$$\frac{|\vec{V}_A'|}{|\vec{V}_A|} = \sqrt{1+[\tan\alpha]^2}$$

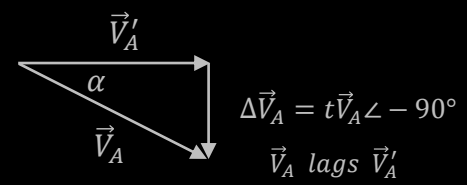

α = the resulting phase angle shift . (no load)
the magnitude of the receiving end voltage
will be higher than the sending end voltage.

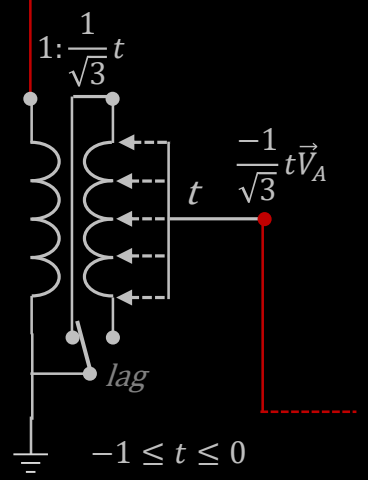

this configuration is also known as an "asymmetrical" PST.
meaning that "relative" to the sending end voltage…
both the receiving end voltage and angle are changed.
lagging angle for sending end since α is negative.
the power into the receiving end will be increased, or …
the power out of the receiving end will be decreased.

Phase Shifting Transformers (cont.)

Look at how the no load voltage and angle change with tap changes
assume 33 tap settings
16 for boosting, 16 for bucking, and 1 for zero.
ranging from -1 to 1 with steps of 0.0625

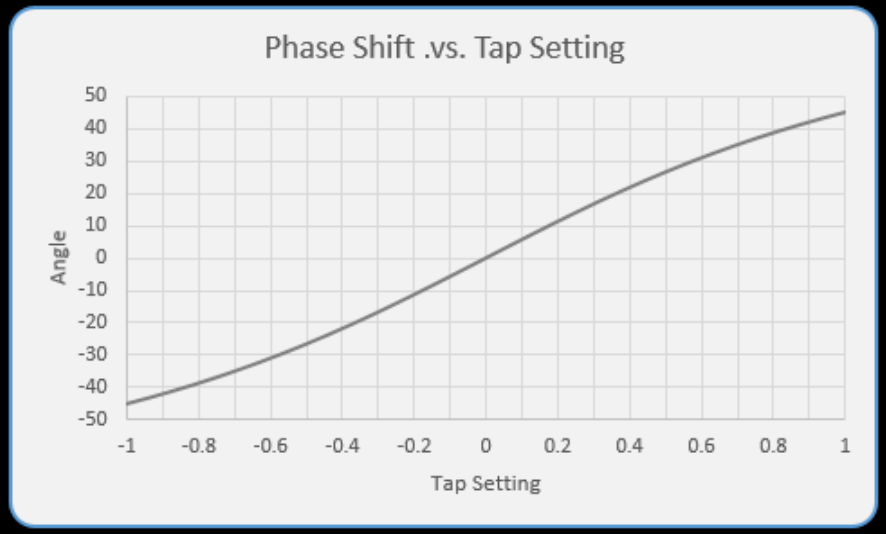

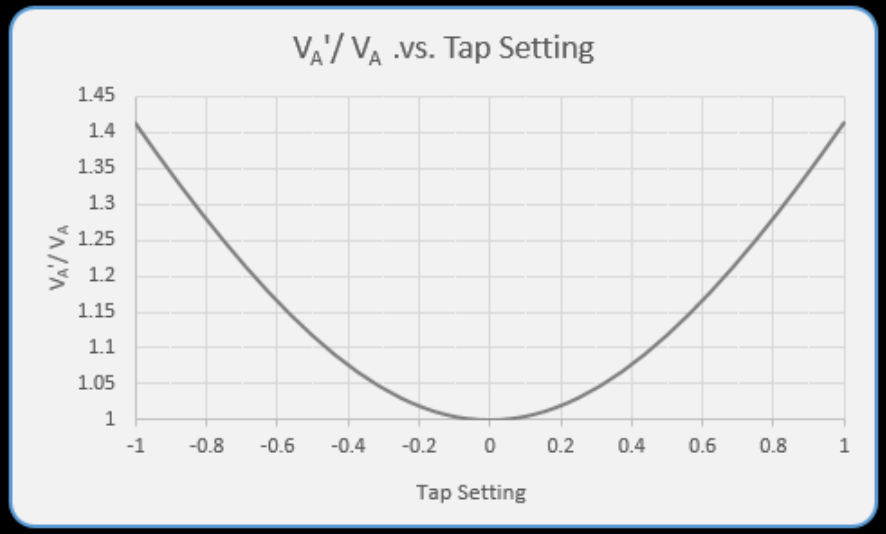

no load phase shift is adjustable between ±45°
for this example
greater phase shifts are possible by increasing the shunt xfmr's turns ratio.
a 90° phase shift is not achievable.

the relative voltage on the receiving bus will be very high for the larger tap settings.
the range of tap settings would be limited to prevent the high voltage.
say you wanted to limit the relative receiving bus voltage to 1.1, then the tap settings would be limited to ±0.4375, resulting in a limited phase shift angle of about ±25°

Change PST configuration

shunt winding is excited with center tap voltage of series winding

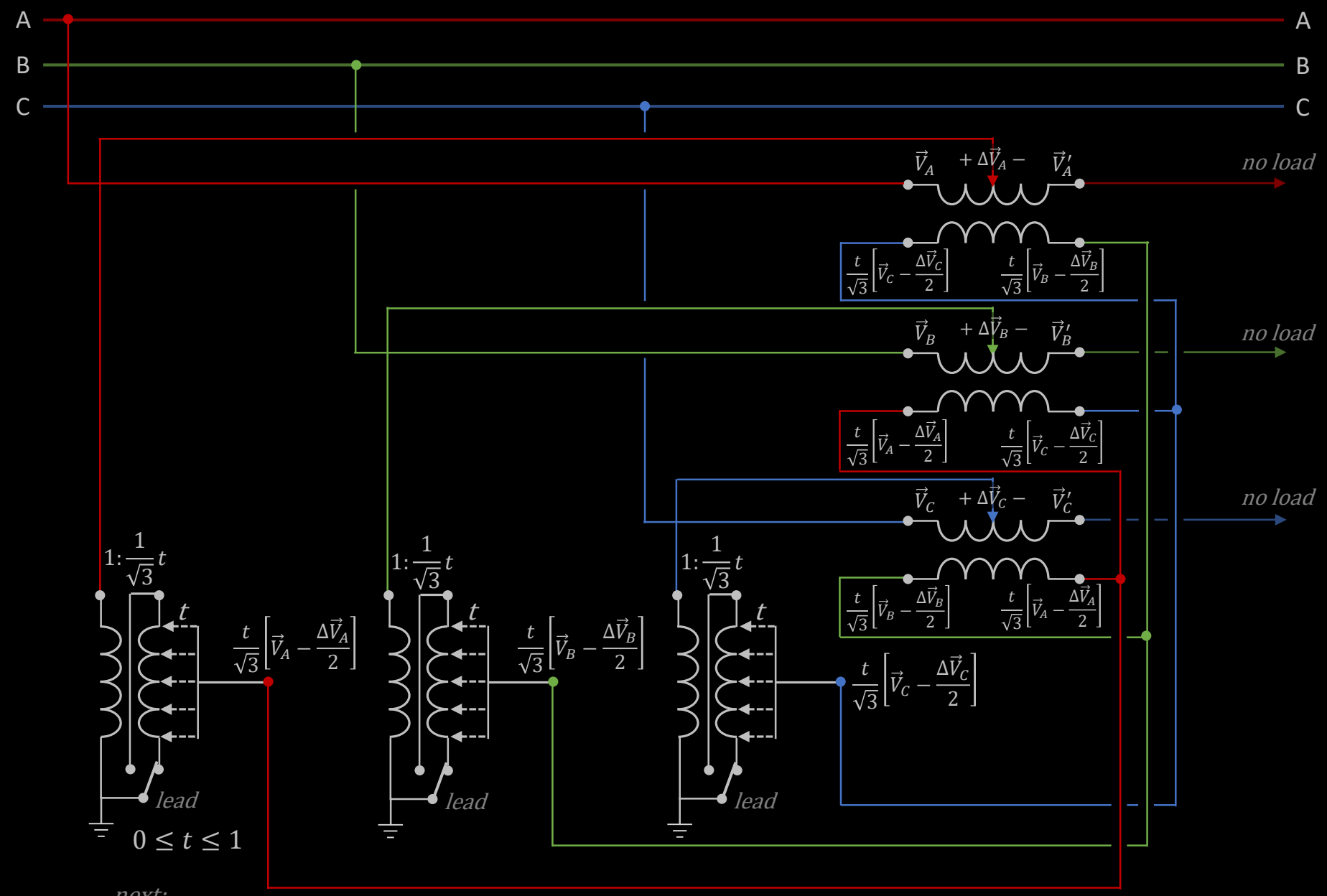

next:

the shunt windings inject the series windings with a voltage that is more than 90° out of phase

Leading PST

$$\vec{V}_A = V_\phi\angle 0$$
$$\vec{V}_B = \vec{V}_A\angle -120°$$
$$\vec{V}_C = \vec{V}_A\angle 120°$$

consider phase A
and
calculate the injected voltage

$$\vec{V}_{AB} = \sqrt{3}\vec{V}_A\angle 30°$$
$$\vec{V}_{BC} = \sqrt{3}\vec{V}_A\angle -90°$$
$$\vec{V}_{CA} = \sqrt{3}\vec{V}_A\angle 150°$$

$$\Delta\vec{V}_A = \frac{t}{\sqrt{3}}\left[\vec{V}_C - \frac{\Delta\vec{V}_C}{2}\right] - \frac{t}{\sqrt{3}}\left[\vec{V}_B - \frac{\Delta\vec{V}_B}{2}\right]$$

$$\Delta\vec{V}_A = \frac{t}{\sqrt{3}}\left[\vec{V}_C - \vec{V}_B\right] + \frac{t}{\sqrt{3}}\left[\frac{\Delta\vec{V}_B}{2} - \frac{\Delta\vec{V}_C}{2}\right]$$

$$\Delta\vec{V}_A = \frac{t}{\sqrt{3}}\vec{V}_{CB} + \frac{t}{\sqrt{3}}\frac{\Delta\vec{V}_{BC}}{2}$$

$$\Delta\vec{V}_A = -\frac{t}{\sqrt{3}}\vec{V}_{BC} + \frac{t}{\sqrt{3}}\frac{\Delta\vec{V}_{BC}}{2}$$

$$\Delta\vec{V}_A = -\frac{t}{\sqrt{3}}\sqrt{3}\vec{V}_A\angle -90° + \frac{t}{\sqrt{3}}\frac{\sqrt{3}\Delta\vec{V}_A\angle -90°}{2}$$

$$\Delta\vec{V}_A = t\vec{V}_A\angle 90° - t\frac{\Delta\vec{V}_A}{2}\angle 90°$$

$$\Delta\vec{V}_A + t\frac{\Delta\vec{V}_A}{2}\angle 90° = t\vec{V}_A\angle 90°$$

$$\Delta\vec{V}_A\left[1 + \frac{t}{2}\angle 90°\right] = t\vec{V}_A\angle 90°$$

$$\boxed{\frac{\Delta\vec{V}_A}{\vec{V}_A} = \frac{t\angle 90°}{1 + \frac{t}{2}\angle 90°}}$$

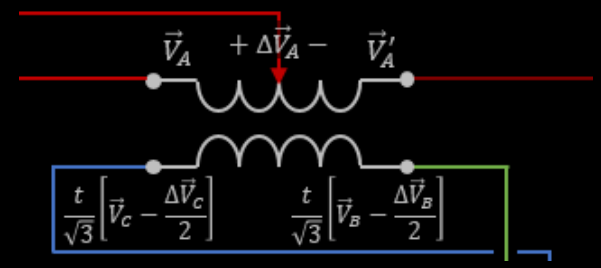

$$\boxed{\begin{aligned}\frac{\Delta\vec{V}_A}{\vec{V}_A} &= \frac{t\angle 90°}{\sqrt{1 + \left[\frac{t}{2}\right]^2}\angle \tan^{-1}\left[\frac{t}{2}\right]} \\ \frac{\Delta\vec{V}_A}{\vec{V}_A} &= \frac{t}{\sqrt{1 + \left[\frac{t}{2}\right]^2}}\angle 90° - \tan^{-1}\left[\frac{t}{2}\right]\end{aligned}}$$

the injected voltage or voltage change…

- adds 90° minus an angle who's tangent = $\frac{t}{2}$
- multiplies each phases amplitude by $\frac{t}{\sqrt{1+\left[\frac{t}{2}\right]^2}}$

Leading PST (cont.)

aka: Boosting PST

consider phase A

$\vec{V}_A = V_\phi\angle 0$
$\vec{V}_B = \vec{V}_A\angle -120°$
$\vec{V}_C = \vec{V}_A\angle 120°$

$\vec{V}_{AB} = \sqrt{3}\vec{V}_A\angle 30°$
$\vec{V}_{BC} = \sqrt{3}\vec{V}_A\angle -90°$
$\vec{V}_{CA} = \sqrt{3}\vec{V}_A\angle 150°$

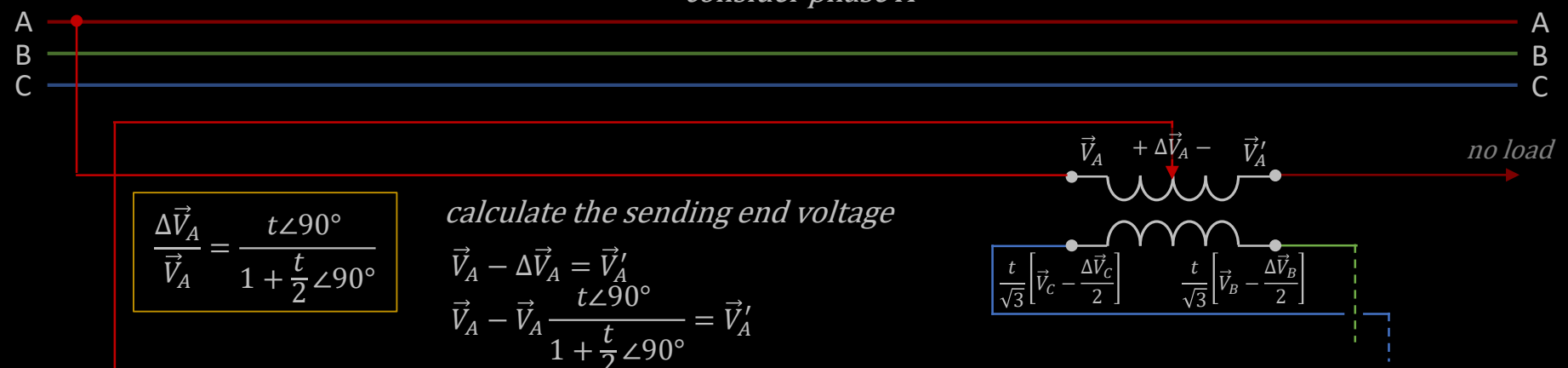

$$\boxed{\frac{\Delta\vec{V}_A}{\vec{V}_A} = \frac{t\angle 90°}{1+\frac{t}{2}\angle 90°}}$$

calculate the sending end voltage

$$\vec{V}_A - \Delta\vec{V}_A = \vec{V}_A'$$

$$\vec{V}_A - \vec{V}_A\frac{t\angle 90°}{1+\frac{t}{2}\angle 90°} = \vec{V}_A'$$

$$\frac{\vec{V}_A}{\vec{V}_A'} = \left[1 - \frac{t\angle 90°}{1+\frac{t}{2}\angle 90°}\right]^{-1}$$

$$\frac{\vec{V}_A}{\vec{V}_A'} = \left[\frac{1+\frac{t}{2}\angle 90° - t\angle 90°}{1+\frac{t}{2}\angle 90°}\right]^{-1}$$

$$\frac{\vec{V}_A}{\vec{V}_A'} = \frac{1+\frac{t}{2}\angle 90°}{1-\frac{t}{2}\angle 90°}$$

$$\frac{\vec{V}_A}{\vec{V}_A'} = \frac{\sqrt{1+\left[\frac{t}{2}\right]^2}\angle\tan^{-1}\left[\frac{t}{2}\right]}{\sqrt{1+\left[\frac{t}{2}\right]^2}\angle -\tan^{-1}\left[\frac{t}{2}\right]}$$

$$\frac{\vec{V}_A}{\vec{V}_A'} = 1\angle\alpha$$

$$\alpha = 2\tan^{-1}\left[\frac{t}{2}\right]$$

$$|\vec{V}_A'| = |\vec{V}_A|$$

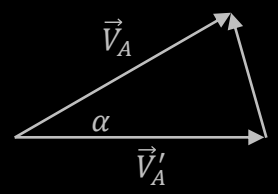

$$\Delta\vec{V}_A = \frac{t\vec{V}_A}{\sqrt{1+\left[\frac{t}{2}\right]^2}}\angle 90° + \tan^{-1}\left[\frac{t}{2}\right]$$

$\vec{V}_A$ *leads* $\vec{V}_A'$

α = the resulting phase angle shift . (no load)
the magnitude of the receiving end voltage
equals the sending end voltage.

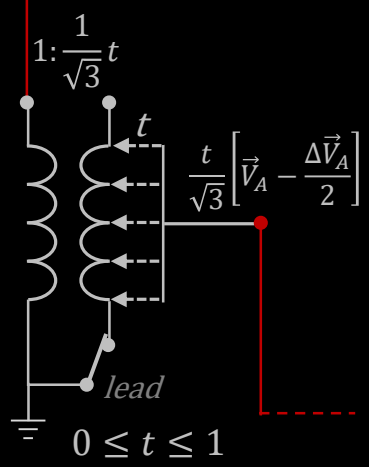

this configuration is known as a "symmetrical" PST.
meaning that "relative" to the sending end voltage...
only the receiving end angle is changed.
leading angle for sending end since α is positive.
the power out of the receiving end will be increased, or ...
the power into the receiving end will be decreased.

Lagging PST

toggle the Lead – Lag switch (reverses polarity of shunt secondary winding)

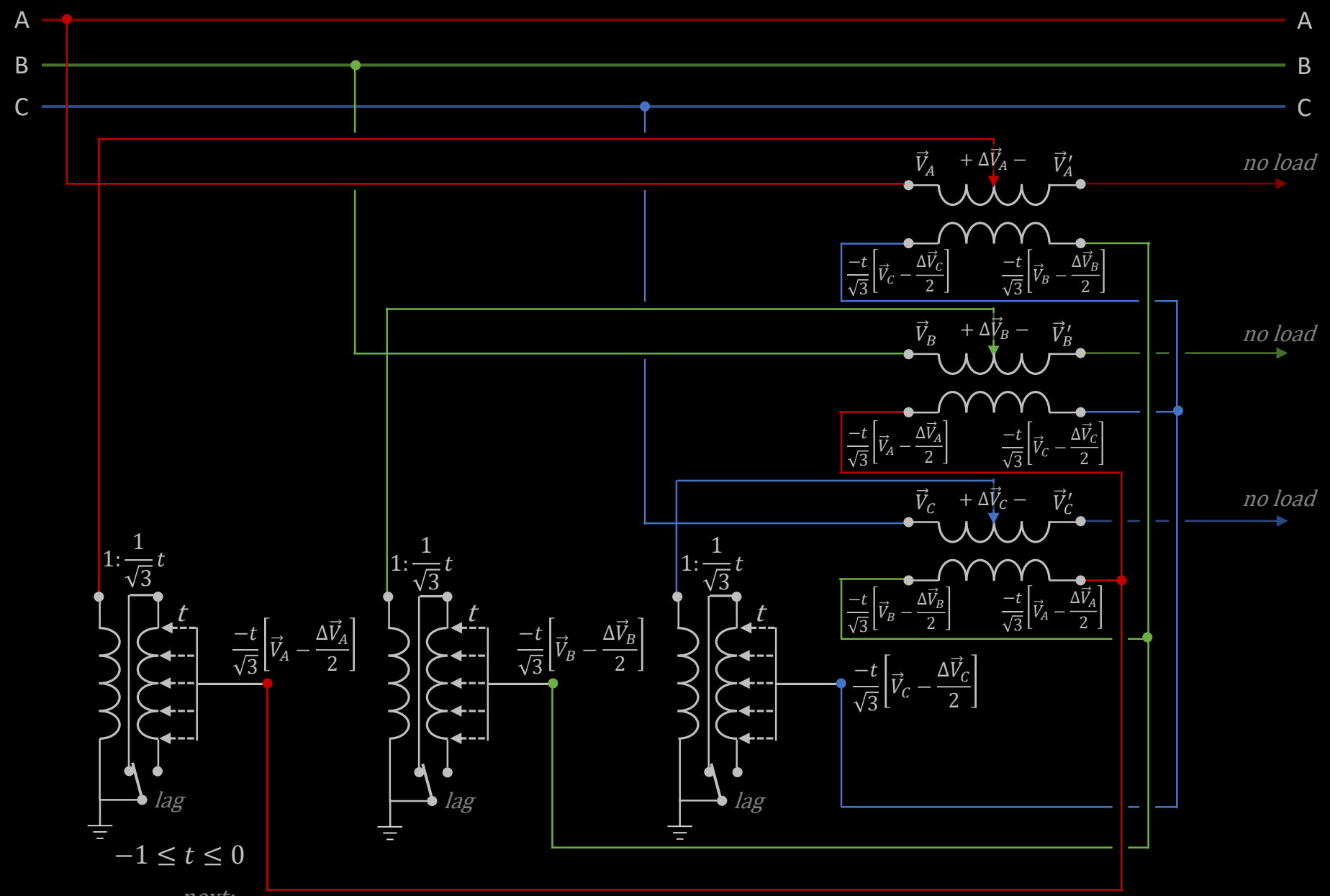

next:

the shunt windings inject the series windings with a voltage that less than 90° out of phase

Lagging PST

consider phase A
and
calculate the injected voltage

$$\vec{V}_A = V_\phi\angle 0$$
$$\vec{V}_B = \vec{V}_A\angle -120°$$
$$\vec{V}_C = \vec{V}_A\angle 120°$$

$$\vec{V}_{AB} = \sqrt{3}\vec{V}_A\angle 30°$$
$$\vec{V}_{BC} = \sqrt{3}\vec{V}_A\angle -90°$$
$$\vec{V}_{CA} = \sqrt{3}\vec{V}_A\angle 150°$$

$$\Delta\vec{V}_A = \frac{-t}{\sqrt{3}}\left[\vec{V}_C - \frac{\Delta\vec{V}_C}{2}\right] - \frac{-t}{\sqrt{3}}\left[\vec{V}_B - \frac{\Delta\vec{V}_B}{2}\right]$$

$$\Delta\vec{V}_A = \frac{t}{\sqrt{3}}\left[\frac{\Delta\vec{V}_C}{2} - \vec{V}_C\right] + \frac{t}{\sqrt{3}}\left[\vec{V}_B - \frac{\Delta\vec{V}_B}{2}\right]$$

$$\Delta\vec{V}_A = \frac{t}{\sqrt{3}}\vec{V}_{BC} + \frac{t}{\sqrt{3}}\frac{\Delta\vec{V}_{CB}}{2}$$

$$\Delta\vec{V}_A = \frac{t}{\sqrt{3}}\vec{V}_{BC} - \frac{t}{\sqrt{3}}\frac{\Delta\vec{V}_{BC}}{2}$$

$$\Delta\vec{V}_A = \frac{t}{\sqrt{3}}\sqrt{3}\vec{V}_A\angle -90° - \frac{t}{\sqrt{3}}\frac{\sqrt{3}\Delta\vec{V}_A\angle -90°}{2}$$

$$\Delta\vec{V}_A = -t\vec{V}_A\angle 90° + t\frac{\Delta\vec{V}_A}{2}\angle 90°$$

$$\Delta\vec{V}_A - t\frac{\Delta\vec{V}_A}{2}\angle 90° = -t\vec{V}_A\angle 90°$$

$$\Delta\vec{V}_A\left[1 - \frac{t}{2}\angle 90°\right] = -t\vec{V}_A\angle 90°$$

$$\boxed{\frac{\Delta\vec{V}_A}{\vec{V}_A} = \frac{-t\angle 90°}{1 - \frac{t}{2}\angle 90°}}$$

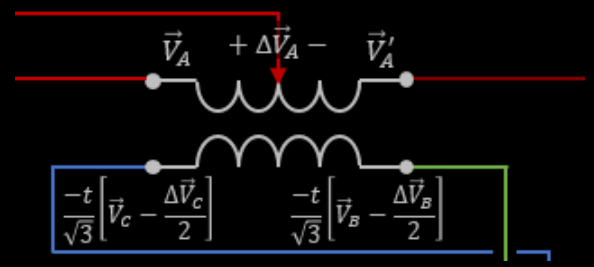

$$\boxed{\begin{aligned}\frac{\Delta\vec{V}_A}{\vec{V}_A} &= \frac{-t\angle 90°}{\sqrt{1 + \left[\frac{t}{2}\right]^2}\angle -\tan^{-1}\left[\frac{t}{2}\right]} \\ \frac{\Delta\vec{V}_A}{\vec{V}_A} &= \frac{t}{\sqrt{1 + \left[\frac{t}{2}\right]^2}}\angle 90° + \tan^{-1}\left[\frac{t}{2}\right]\end{aligned}}$$

the injected voltage or voltage change…

- adds 90° plus an angle who's tangent = $\frac{t}{2}$
- multiplies each phases amplitude by $\frac{t}{\sqrt{1+\left[\frac{t}{2}\right]^2}}$

Lagging PST (cont.)

aka: Bucking PST

consider phase A

$\vec{V}_A = V_\phi\angle 0$
$\vec{V}_B = \vec{V}_A\angle -120°$
$\vec{V}_C = \vec{V}_A\angle 120°$

$\vec{V}_{AB} = \sqrt{3}\vec{V}_A\angle 30°$
$\vec{V}_{BC} = \sqrt{3}\vec{V}_A\angle -90°$
$\vec{V}_{CA} = \sqrt{3}\vec{V}_A\angle 150°$

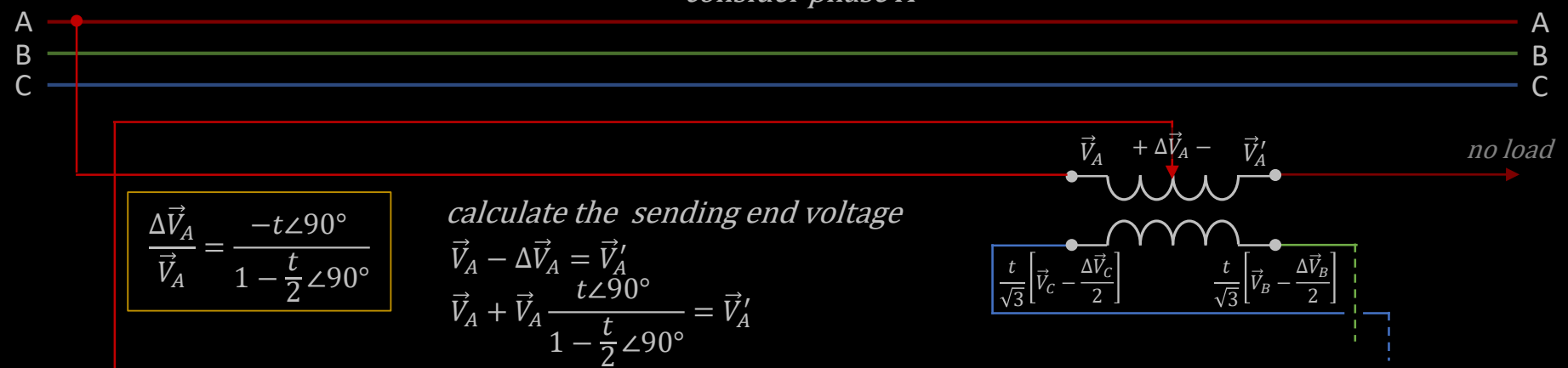

$$\boxed{\frac{\Delta\vec{V}_A}{\vec{V}_A} = \frac{-t\angle 90°}{1-\frac{t}{2}\angle 90°}}$$

calculate the sending end voltage

$$\vec{V}_A - \Delta\vec{V}_A = \vec{V}_A'$$

$$\vec{V}_A + \vec{V}_A\frac{t\angle 90°}{1-\frac{t}{2}\angle 90°} = \vec{V}_A'$$

$$\frac{\vec{V}_A}{\vec{V}_A'} = \left[1+\frac{t\angle 90°}{1-\frac{t}{2}\angle 90°}\right]^{-1}$$

$$\frac{\vec{V}_A}{\vec{V}_A'} = \left[\frac{1-\frac{t}{2}\angle 90° + t\angle 90°}{1-\frac{t}{2}\angle 90°}\right]^{-1}$$

$$\frac{\vec{V}_A}{\vec{V}_A'} = \frac{1-\frac{t}{2}\angle 90°}{1+\frac{t}{2}\angle 90°}$$

$$\frac{\vec{V}_A}{\vec{V}_A'} = \frac{\sqrt{1+\left[\frac{t}{2}\right]^2}\angle -\tan^{-1}\left[\frac{t}{2}\right]}{\sqrt{1+\left[\frac{t}{2}\right]^2}\angle \tan^{-1}\left[\frac{t}{2}\right]}$$

$$\frac{\vec{V}_A}{\vec{V}_A'} = 1\angle -\alpha$$

$$\alpha = 2\tan^{-1}\left[\frac{t}{2}\right]$$

$$|\vec{V}_A'| = |\vec{V}_A|$$

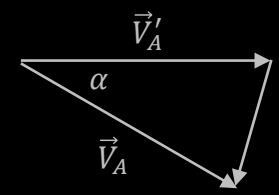

$$\Delta\vec{V}_A = \frac{t\vec{V}_A}{\sqrt{1+\left[\frac{t}{2}\right]^2}}\angle -90° - \tan^{-1}\left[\frac{t}{2}\right]$$

$\vec{V}_A$ *lags* $\vec{V}_A'$

α = the resulting phase angle shift . (no load)
the magnitude of the receiving end voltage
equals the sending end voltage.

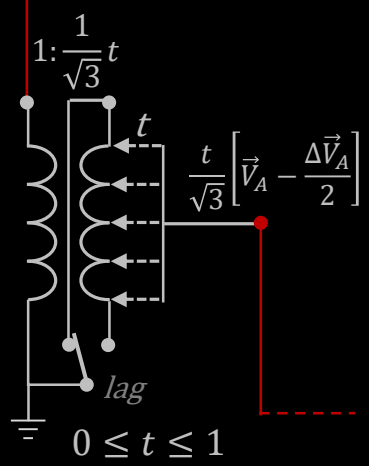

this configuration is known as a "symmetrical" PST.
meaning that "relative" to the sending end voltage...
only the receiving end angle is changed.
lagging angle for sending end since α is negative.
the power into the receiving end will be increased, or ...
the power out of the receiving end will be decreased.

Phase Shifting Transformers
(symmetrical)

Look at how the no load voltage and angle change with tap changes
assume 33 tap settings
16 for boosting, 16 for bucking, and 1 for zero.
ranging from -1 to 1 with steps of 0.0625

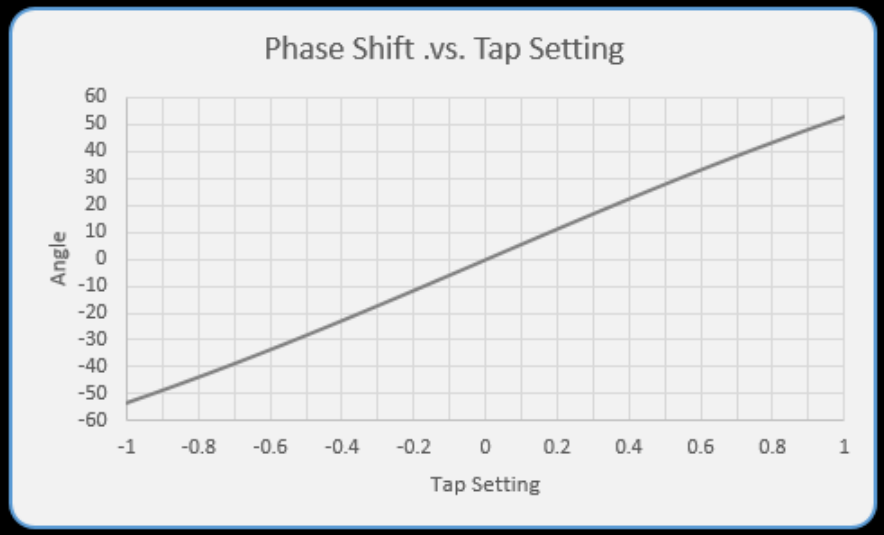

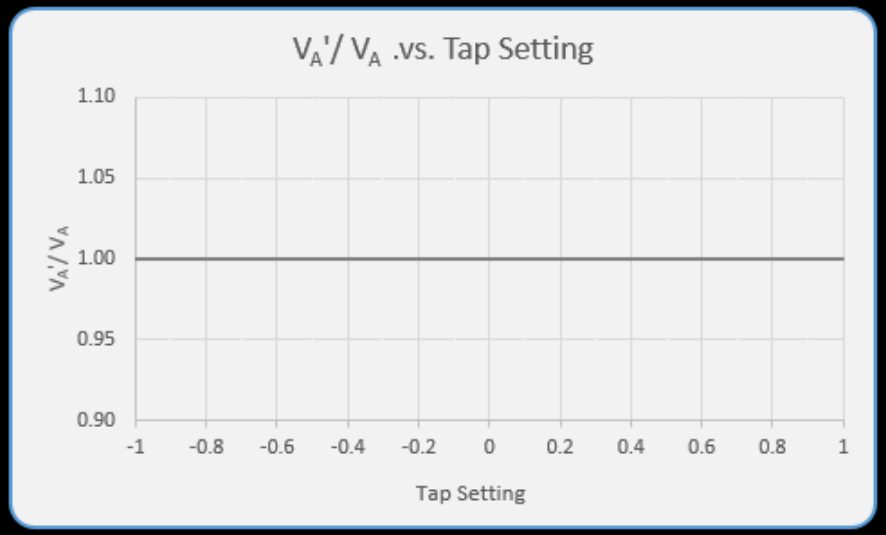

no load phase shift is adjustable between ±53°
for this example
greater phase shifts are possible by increasing
the shunt xfmr's turns ratio.
a 90° phase shift <u>is</u> possible but not practical.

the voltage on the receiving bus is equal to the voltage on the sending bus.

ЗФЕЕ

Dedicated to Power Engineering

Questions or Comments …

contact us