Maximum Line Flow

(with sending and receiving bus voltage = 1.0 pu)

As the current increases in a transmission line:

the line inductance absorbs more and more reactive power.

the reactive power absorbed by the line is supplied by both the system and line capacitance.

When the current is very small …

the line capacitance supplies the reactive power to the line with any excess supplied to the system.

the line is net capacitive.

When the current is very large …

the line capacitance supplies part of the reactive power to the line and the system supplies the rest.

the line is net inductive.

At some amount of current flow …

the reactive power supplied by the line capacitance equals the reactive power absorbed by line inductance.

the line is net resistive.

this current flow is known as Surge Impedance Loading (SIL).

$$SIL = V^2\sqrt{\frac{C}{L}} = V^2\sqrt{\frac{B}{X}}$$

As the current flow increases above SIL …

the magnitude of the receiving bus voltage gets lower.

the magnitude of the angle between the sending and receiving bus gets larger.

an approximation of the sending bus real and reactive power is given by …

$$P_{12} \approx \frac{|V_1||V_2|}{X}\sin\theta_{12} \qquad Q_{12} \approx \frac{|V_1|^2}{X} - \frac{|V_1||V_2|}{X}\cos\theta_{12} \qquad \theta_{12} = \theta_1 - \theta_2 = angle\ between\ buses$$

which says that the maximum real and reactive power of the sending bus is when $\theta_{12} = 90°$

for this exercise …

we will arbitrarily set $\overrightarrow{V_1} = 1\angle 0°$

and force the magnitude of $V_2 = 1$ with whatever bus2 reactive needed. $\therefore \overrightarrow{V_2} = 1\angle\theta_2$

Maximum Line Flow (cont.)

So using the approximations above …

$$P_{12} \approx \frac{1}{X}\sin\theta_2 \qquad Q_{12} \approx \frac{1}{X} - \frac{1}{X}\cos\theta_2$$

$$P_{maz} \approx \frac{1}{X}\sin 90° \qquad Q_{max} \approx \frac{1}{X} - \frac{1}{X}\cos 90°$$

$$P_{max} \approx \frac{1}{X} \qquad Q_{max} \approx \frac{1}{X}$$

$$\therefore S_{max} \approx \sqrt{\frac{1}{X^2} + \frac{1}{X^2}} = \sqrt{\frac{2}{X^2}} = \frac{\sqrt{2}}{X}$$

example… consider:
795 ACSR Drake Conductor
69kV and 21 miles long …

$R_{pu} \approx 0.06 \qquad X_{pu} \approx 0.30$

this approximation says that the max flow is:

$$S_{max} \approx \frac{\sqrt{2}}{0.30} = 4.71 = 471\ MVA$$

Now time to reveal the limitation of this max flow approximation…

it assumes the transmission line is lossless.
meaning that $X \gg R$
in practice this means that $X > 10R \quad or \quad \frac{X}{R} > 10$
from the example conductor above …
this does not hold true … it's $\frac{X}{R} = 5$
as it turns out …
the line resistance is very significant when considering maximum line current transfer.
in addition …
we will show that a 90° angle difference between buses is not practically achievable.
in fact …
we will see that with angles greater than about 60° things become unstable very quickly.

So now derive the relationship between
the sending bus MVA and the receiving bus angle

Maximum Line Flow (cont.)

Consider the Bus-Bus system below with:

$\vec{V_1} = 1\angle 0°$ $\quad \vec{V_2} = V_2\angle\theta_2 \longleftarrow$ V_{2pu} forced with Q at Bus2

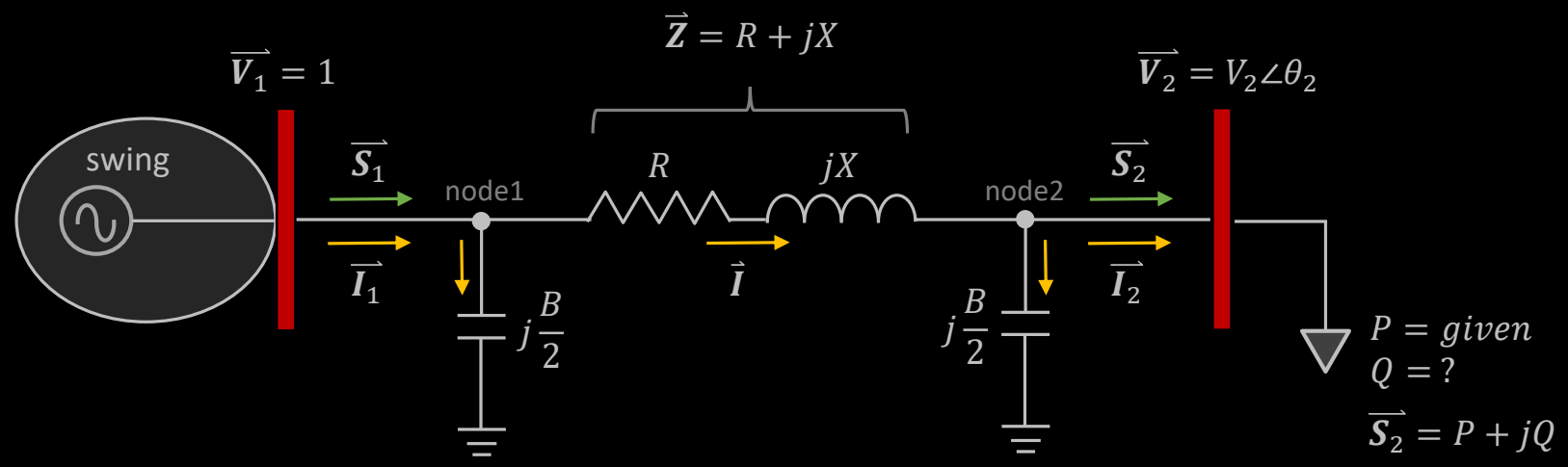

node2

find Q and θ_2

$$\frac{1 - V_2\angle\theta_2}{\vec{Z}} = \frac{jBV_2\angle\theta_2}{2} + \vec{I_2}$$

$$\frac{1 - V_2\angle\theta_2}{\vec{Z}} = \frac{jBV_2\angle\theta_2}{2} + \frac{P - jQ}{V_2\angle -\theta_2}$$

$$\frac{(V_2\angle -\theta_2) - V_2^2}{\vec{Z}} = \frac{jBV_2^2}{2} + P - jQ$$

$$(V_2\angle -\theta_2) - V_2^2 = \frac{jB(R + jX)V_2^2}{2} + (P - jQ)(R + jX)$$

$$(V_2\angle -\theta_2) - V_2^2 = \frac{jBRV_2^2}{2} - \frac{BXV_2^2}{2} = PR + QX + j(PX - QR)$$

$$V_2\angle -\theta_2 = V_2^2 - \frac{BXV_2^2}{2} + PR + QX + \frac{jBRV_2^2}{2} + j(PX - QR)$$

$$\vec{S_2} = \vec{V_2}\,\vec{I_2^*}$$

$$\vec{I_2} = \frac{\vec{S_2^*}}{\vec{V_2^*}}$$

$$\vec{I_2} = \frac{P - jQ}{V_2\angle -\theta_2}$$

Maximum Line Flow (cont.)

$$V_2\angle{-\theta_2} = V_2^2 - \frac{BX}{2}V_2^2 + PR + QX + j\left[\frac{BR}{2}V_2^2 + PX - QR\right]$$

$$\underbrace{V_2\cos\theta_2}\ \underbrace{- j\sin\theta_2}\ = \underbrace{V_2^2 - \frac{BX}{2}V_2^2 + PR + QX}\ + \underbrace{j\left[\frac{BR}{2}V_2^2 + PX - QR\right]}$$

equate real and imaginary parts

$$V_2\cos\theta_2 = V_2^2 - \frac{BX}{2}V_2^2 + PR + QX$$

$$V_2\cos\theta_2 = \left[1 - \frac{BX}{2}\right]V_2^2 + PR + QX$$

$$\cos\theta_2 = \underbrace{\left[1 - \frac{BX}{2}\right]V_2 + \frac{PR}{V_2}}_{E} + \underbrace{\frac{X}{V_2}}_{D}Q$$

$$\cos\theta_2 = DQ + E$$

$$-V_2\sin\theta_2 = \frac{BR}{2}V_2^2 + PX - QR$$

$$\sin\theta_2 = \frac{-BR}{2}V_2 - \frac{PX}{V_2} + Q\frac{R}{V_2}$$

$$\sin\theta_2 = \underbrace{\frac{R}{V_2}}_{C}Q - \underbrace{\left[\frac{BR}{2}V_2 + \frac{PX}{V_2}\right]}_{F}$$

$$\sin\theta_2 = CQ - F$$

$$[\sin\theta_2]^2 + [\cos\theta_2]^2 = 1$$
$$[CQ - F]^2 + [DQ + E]^2 = 1$$
$$C^2Q^2 - 2CFQ + F^2 + D^2Q^2 + 2EDQ + E^2 = 1$$
$$C^2Q^2 + D^2Q^2 + 2EDQ - 2CFQ + E^2 + F^2 = 1$$
$$\underbrace{[C^2 + D^2]}_{a}Q^2 + \underbrace{[2ED - 2CF]}_{b}Q + \underbrace{E^2 + F^2 - 1}_{c} = 0$$

First: use Quadratic form to find Q given V2

$$\boxed{Q = \frac{-b + \sqrt{b^2 - 4ac}}{2a}}$$

Then: find the angle of Bus2

$$\boxed{\theta_2 = \sin^{-1}[CQ - F]}$$

finally: use the angle of Bus2 to get sending MVA of Bus_1

(Next)

$$V_2 \cos\theta_2 = V_2^2 - \frac{BX}{2} V_2^2 + PR + QX$$

$$V_2 \cos\theta_2 = \left[1 - \frac{BX}{2}\right] V_2^2 + PR + QX$$

$$\cos\theta_2 = \underbrace{\left[1 - \frac{BX}{2}\right] V_2 + \frac{PR}{V_2}}_{E} + \underbrace{\frac{X}{V_2}}_{D} Q$$

$$\cos\theta_2 = DQ + E$$

$$-V_2 \sin\theta_2 = \frac{BR}{2} V_2^2 + PX - QR$$

$$\sin\theta_2 = \frac{-BR}{2} V_2 - \frac{PX}{V_2} + Q\frac{R}{V_2}$$

$$\sin\theta_2 = \underbrace{\frac{R}{V_2}}_{C} Q - \underbrace{\left[\frac{BR}{2} V_2 + \frac{PX}{V_2}\right]}_{F}$$

$$\sin\theta_2 = CQ - F$$

$$[\sin\theta_2]^2 + [\cos\theta_2]^2 = 1$$

$$[CQ - F]^2 + [DQ + E]^2 = 1$$

$$C^2Q^2 - 2CFQ + F^2 + D^2Q^2 + 2EDQ + E^2 = 1$$

$$C^2Q^2 + D^2Q^2 + 2EDQ - 2CFQ + E^2 + F^2 = 1$$

$$\underbrace{[C^2 + D^2]}_{a} Q^2 + \underbrace{[2ED - 2CF]}_{b} Q + \underbrace{E^2 + F^2 - 1}_{c} = 0$$

First: use Quadratic form to find Q given V2

$$\boxed{Q = \frac{-b + \sqrt{b^2 - 4ac}}{2a}}$$

Then: find the angle of Bus2

$$\boxed{\theta_2 = \sin^{-1}[CQ - F]}$$

finally: use the angle of Bus2 to get sending MVA of Bus1

Maximum Line Flow (cont.)

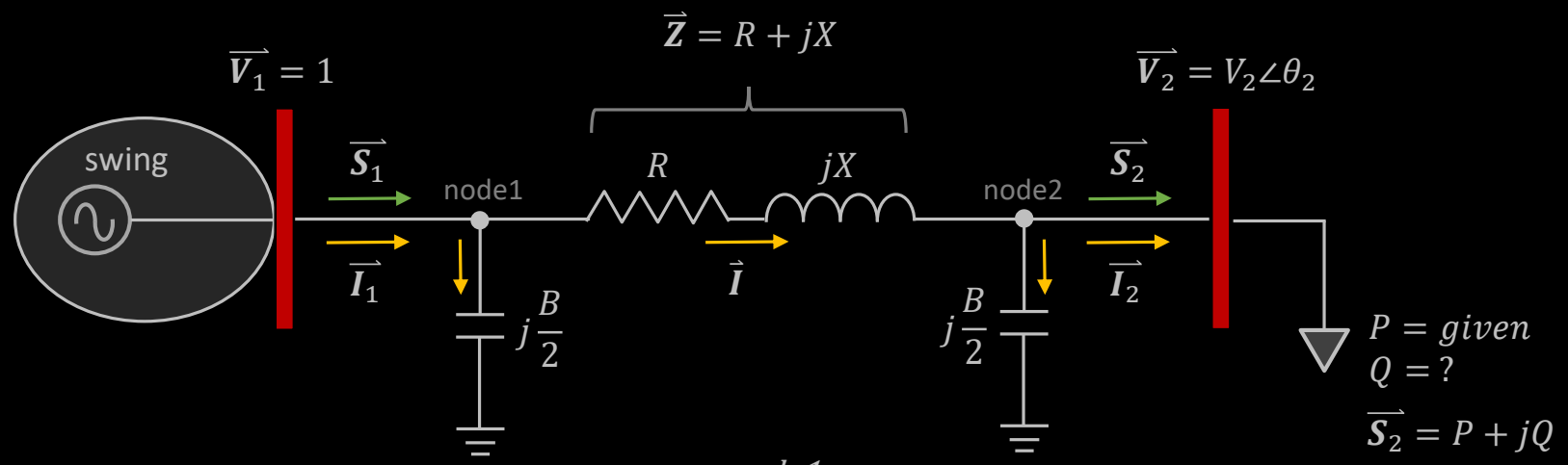

<u>*node1*</u>

find S_1 given V_2 and θ_2

$$\vec{S_1} = -1\vec{I_1^*}$$

$$\vec{I_1} = \frac{jB}{2} + \frac{1 - V_2\angle\theta_2}{\vec{Z}}$$

$$-\vec{I_1} = \frac{-jB}{2} + \frac{V_2\angle\theta_2 \ - 1}{\vec{Z}}$$

$$\vec{S_1} = -\vec{I_1^*} = \frac{jB}{2} + \frac{(V_2\angle{-\theta_2}) - 1}{\vec{Z^*}}$$

$$\vec{S_1} = \frac{jB}{2} + \frac{V_2\angle -\theta_2}{Z\angle -\theta_Z} - \frac{1}{Z\angle -\theta_Z}$$

$$\vec{S_1} = \frac{jB}{2} + \frac{V_2}{Z}\angle(-\theta_2+\theta_Z) - \frac{1}{Z}\angle\theta_Z$$

$$\vec{S_1} = \frac{V_2}{Z}\angle\theta_Z - \theta_2 - \frac{1}{Z}\angle\theta_Z + \frac{jB}{2}$$

$$\vec{S_1} = \frac{V_2}{Z}\cos(\theta_Z - \theta_2) - \frac{1}{Z}\cos\theta_Z + j\frac{V_2}{Z}\sin(\theta_Z - \theta_2) - j\frac{1}{Z}\sin\theta_Z + \frac{jB}{2}$$

Maximum Line Flow (cont.)

$$\overrightarrow{S_1} = \underbrace{\frac{V_2}{Z}\cos(\theta_Z - \theta_2) - \frac{1}{Z}\cos\theta_Z}_{} + j\underbrace{\frac{V_2}{Z}\sin(\theta_Z - \theta_2) - j\frac{1}{Z}\sin\theta_Z + \frac{jB}{2}}_{}$$

equate real and imaginary parts

$$P_1 = \frac{V_2}{Z}\cos(\theta_Z - \theta_2) - \frac{1}{Z}\cos\theta_Z$$
$$Q_1 = \frac{V_2}{Z}\sin(\theta_Z - \theta_2) - \frac{1}{Z}\sin\theta_Z + \frac{B}{2}$$
$$S_1 = \sqrt{P_1^2 + Q_1^2}$$

$$Z = \sqrt{R^2 + X^2}$$
$$\theta_Z = \tan^{-1}\frac{X}{R}$$

now we can plot the operating points to find the maximum possible angle between buses which will result in the maximum possible MVA from the sending bus

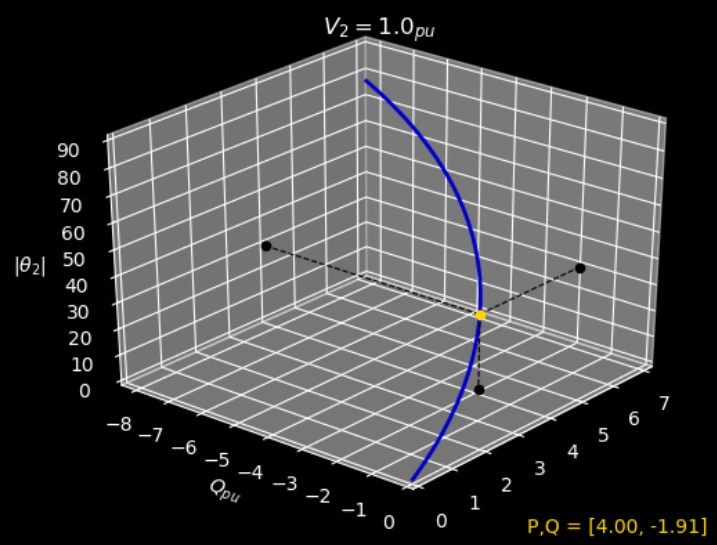

about 76° max for this example

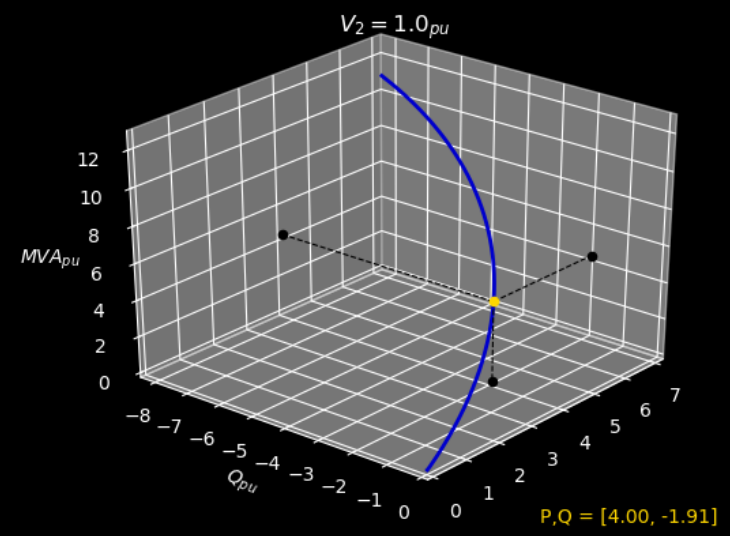

about 10900 MVA max for this example

Maximum Line Flow (cont.)

from a practical perspective:
(assuming the line thermal limit is not exceeded)
the maximum angle and MVA is not realistic …

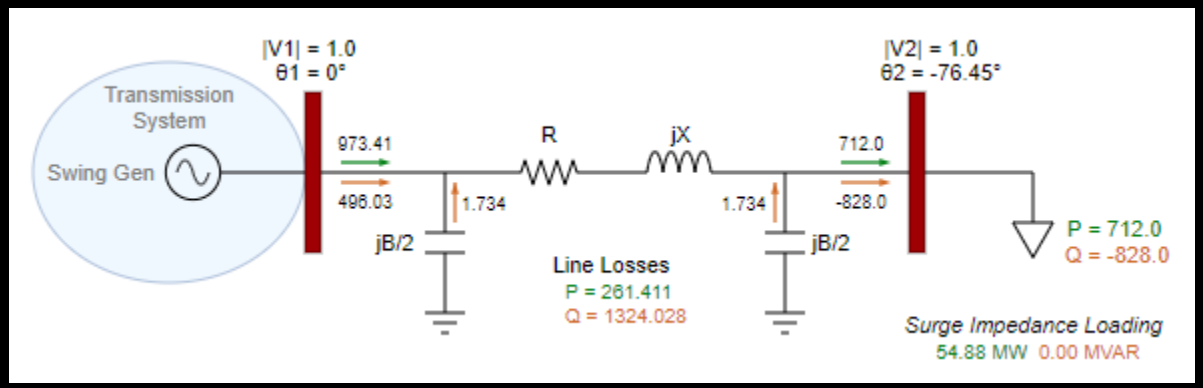

it would require enormous capacitive compensation
at the receiving bus to maintain voltage
resulting in excessive line losses

ЗФЕЕ

Dedicated to Power Engineering

Questions or Comments …

contact us