Δ – T – Δ Conversion Equations

Given: Δ Model

$$Z_p = \frac{Z_{ps} + Z_{pt} - Z_{st}}{2}$$

$$Z_s = \frac{Z_{ps} - Z_{pt} + Z_{st}}{2}$$

$$Z_t = \frac{-Z_{ps} + Z_{pt} + Z_{st}}{2}$$

Given: T Model

$$Z_{ps} = Z_p + Z_s$$

$$Z_{pt} = Z_p + Z_t$$

$$Z_{st} = Z_s + Z_t$$

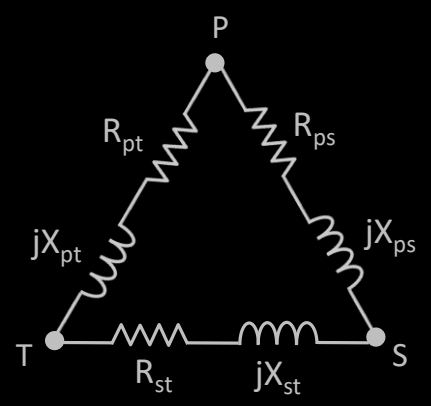

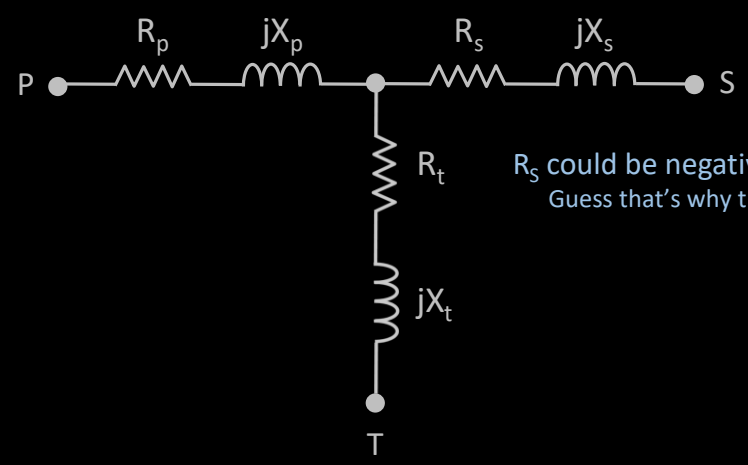

R_S could be negative!

Guess that's why they call it modeling

ЗФЕЕ

Dedicated to Power Engineering

Questions or Comments …

contact us